Fundamentals

Charles J. Mozina and Jonathan D. Gardell

***Abstract*—This introductory chapter of the tutorial provides basic background information to better understand the chapters that follow. It is intended to provide information for the less experienced engineer. This chapter describes the electrical workings and dynamics of synchronous generators and their connections to the power system. Generator performance under short-circuit conditions is also described, along with generator grounding practices. In addition, some of the most misunderstood aspects of generator protection are also addressed. Finally, the IEEE C37 guides that relate to generator protection are enumerated along with the definitions of relay device numbers.**

I. Introduction

The protection of synchronous generators involves the considerations of more harmful abnormal operating conditions than the protection of any other power system element. In a properly protected generator, automatic protection against harmful abnormal conditions is required. The bulk of this tutorial deals with the need to provide such protection. The objections of some to the addition of such protection is not so much that it will fail to operate when it should, but that it might operate improperly to remove a generator from service unnecessarily. This fear of applying proper protection can be greatly reduced by understanding the need for such protection and how to apply it to a given generator so it does not misoperate. Unnecessary generator tripping is undesirable, but the consequences of not tripping and damaging the machine are far worse. The cost to the utility for such an occurrence is not only the cost of repair or replacement of the damaged machine, but also the substantial cost of purchasing replacement power while the unit is out of service. At manned locations, an alert and skillful operator can sometimes avoid removing a generator from service by correcting the abnormal condition. In the vast majority of cases, however, the event will occur too rapidly for the operator to react; thus, automatic detection and isolation are required. Operators have also mistakenly created abnormal conditions where tripping to avoid damage is required. Inadvertent energizing and overexcitation are examples of such events. Operating procedures are not a substitute for proper automatic protection and cannot be relied on to successfully protect the generator.

II. Basic Synchronous Generators

A synchronous generator converts mechanical/thermal energy into electrical energy. The mechanical power of the prime mover rotates the shaft of the generator on which the dc field is installed. Fig. 1 illustrates a simple generating machine.

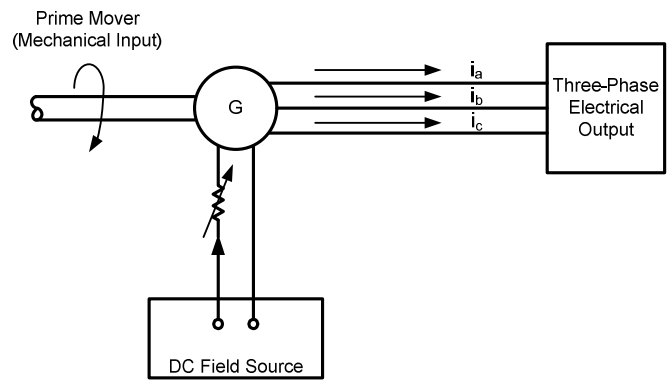

Fig. 1. Basic Synchronous Generator

Prime mover energy can be obtained from burning fossil fuels such as coal, oil, or natural gas. The energy that is produced turns the generator shaft (rotor) at typical speeds of 1,800 or 3,600 rpm on a 60 Hz system. Energy is converted to mechanical rotation in a turbine. At nuclear plants, uranium fuel is converted to heat through the fission process that produces steam. Steam is forced through a steam turbine to rotate the generator shaft. Prime mover energy can also be obtained from falling or moving water. Hydroelectric generators rotate much slower (around 100 to 300 rpm) than steam turbines.

Synchronous machines are classified into two principal designs: round rotor and salient pole. Fig. 2 provides a cross-sectional view of both construction types. Generators driven by fossil fuel turbines have cylindrical (round) rotors with slots into which distributed field windings are placed. Most cylindrical rotors are made of solid steel forgings. The number of poles is typically two or four. Generators driven by water wheels (hydraulic turbines) have laminated salient-pole rotors with concentrated field windings and a large number of poles. Whatever type of prime mover or machine design, the energy source used to turn the shaft is maintained at a constant level through a speed regulator known as a governor. The dc flux rotation in the generator field reacts with the stator windings, and because of the induction principle, a three-phase voltage is generated.

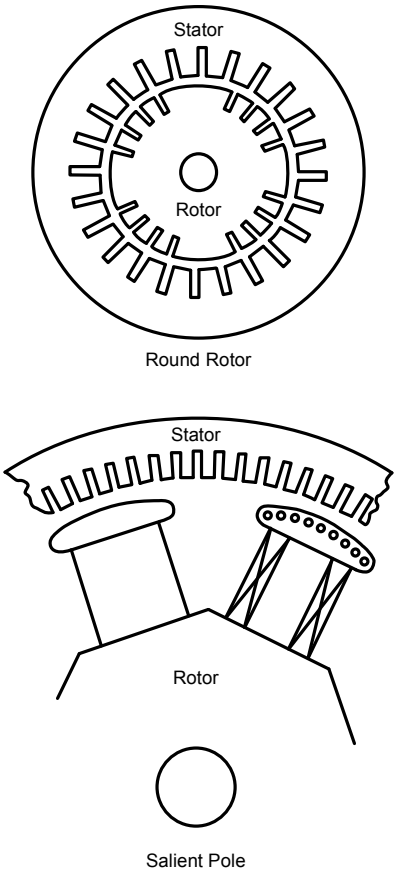

Fig. 2. Synchronous Generator Types

III. Connection of Generators to the Power System

Two basic methods are used within the industry to connect generators to the power system: direct and unit connections.

A. Direct Connection

Fig. 3a shows the one-line diagram for a direct connection of a generator to the power system. The generator is connected to its load bus without going through a voltage transformation and supplies power directly to the load. This type of connection is an earlier method used when generators were small in size. It is still used today to connect smaller machines, especially in industrial cogeneration, to facility distribution systems.

B. Unit Connection

Fig. 3b shows the one-line diagram for a unit connection of a generator to the power system through a dedicated step-up transformer. Auxiliary generator load is supplied from a step-down transformer connected to the generator terminals. Most large generators are connected to the power system in this manner using a wye-delta, step-up main transformer connection. By connecting the generator to a delta system, ground fault current can be dramatically reduced using high-impedance grounding. Basic grounding practices are addressed later in this tutorial chapter and again in more detail in Chapter 2.2.

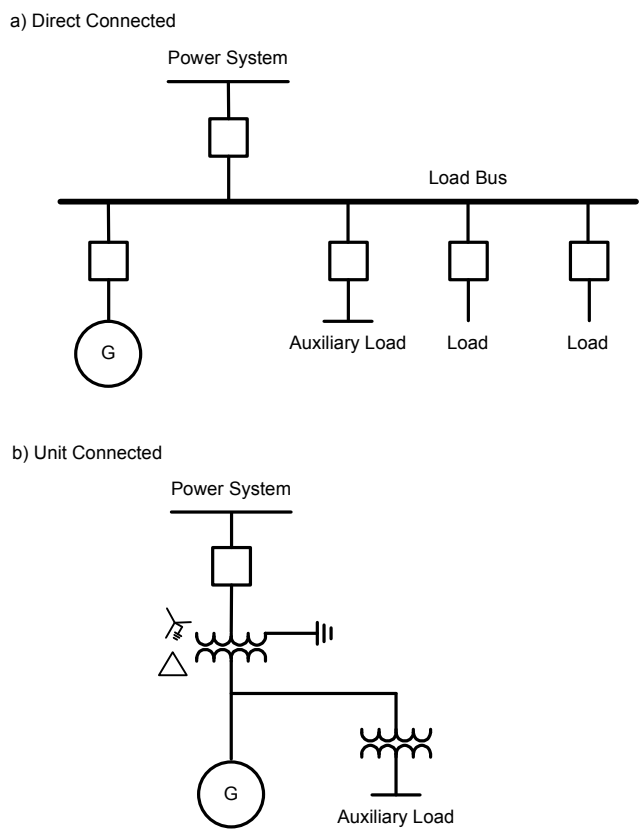

Fig. 3. Generator Connections

IV. Synchronous Generator Short-Circuit Behavior

The equivalent electrical circuit of a synchronous generator is an internal voltage in series with impedance. For fault current calculation, the resistance component of the generator impedance is small compared to the reactance and is usually neglected. Fig. 4 shows the symmetrical component representation of a generator. Symmetrical component analysis is an important mathematical tool to calculate generator currents and voltages under unbalanced conditions. References [1] and [2] provide good basic information on this subject.

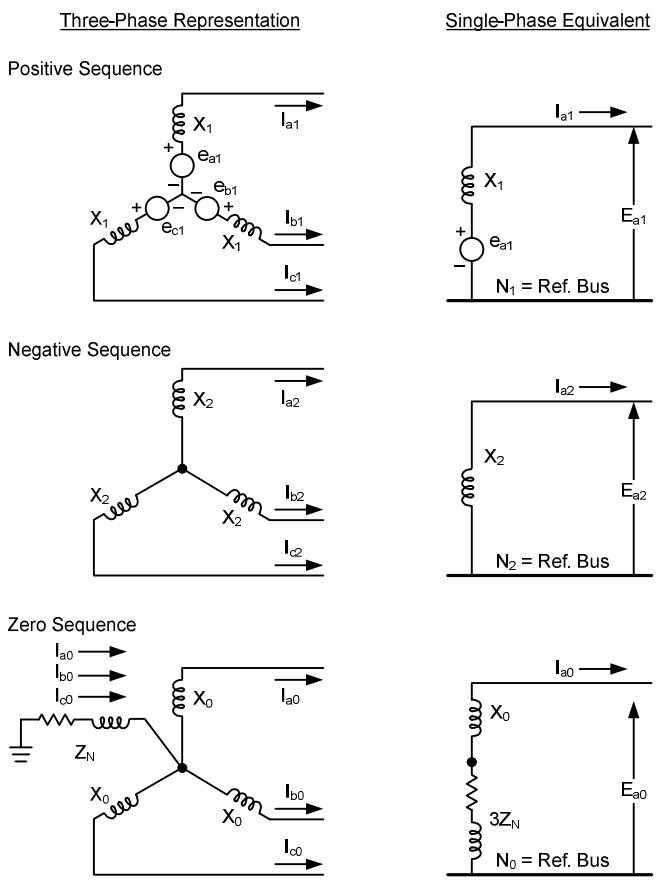

Fig. 4. Symmetrical Component Representation

A. Positive Sequence (X_1)

Three different positive-sequence reactance values are used. In the positive-sequence equivalent circuit, Xd″ indicates the subtransient reactance, Xd′ the transient reactance, and Xd the direct-axis generator reactance. All of these direct-axis values are necessary for calculating the short-circuit current value at different times after the short circuit occurs. They are provided by the generator manufacturer as part of the generator test sheet data. Since the subtransient reactance value gives the highest initial current value, it is generally used in system short-circuit calculations for relay applications. The transient reactance value is used for stability consideration.

Calculations of short-circuit performance and fault currents are a function of the generator (stator and field) characteristics, time, and load conditions immediately before the fault. The excitation system performance and characteristics dictate the ability of the generator to provide fault current during this condition. The excitation system will also attempt to keep voltage as high as possible by field-forcing, causing higher terminal voltages. The generator is generally operating in a saturated condition. To calculate fault current, saturated reactance is used with the generator initially operating at no load and at rated voltage. During normal generator operation at near-rated voltage, the reactance values during a fault are ideally somewhere between the saturated and unsaturated values. Exact values depend on the specific prefault conditions and saturation level. Thus, it is suggested that saturated values be used to calculate fault current [3]. Other prefault operating conditions may be reasons to adjust these suggested values for a specific case. Saturated reactance values are lower and therefore provide a more conservative, higher calculated fault current.

B. Negative Sequence (X_2)

The flow of negative-sequence current is of opposite phase rotation through the machine and appears as a double-frequency (120 Hz in a 60 Hz system) current in the rotor. The average of the direct-axis subtransient reactance under and between the poles gives a good approximation of negative-sequence reactance. In a salient-pole machine, negative sequence is the average of the subtransient direct-axis and quadrature-axis reactances ($X_2 = (Xd'' + Xq'')/2$), but in a round-rotor machine, X_2 equals Xd″.

C. Zero Sequence (X_0)

The zero-sequence reactance is less than the positive- and negative-sequence values. Because of the high available ground fault current for a solidly grounded machine, impedance (reactance or resistance) is almost always inserted in the neutral grounding path, except on very small generators where the cost of providing such grounding in relationship to the machine cost is significant. In addition, generators are only mechanically designed for a bolted, three-phase terminal fault. A solidly grounded generator line-to-ground fault current level can exceed this value because of the very low zero-sequence reactance.

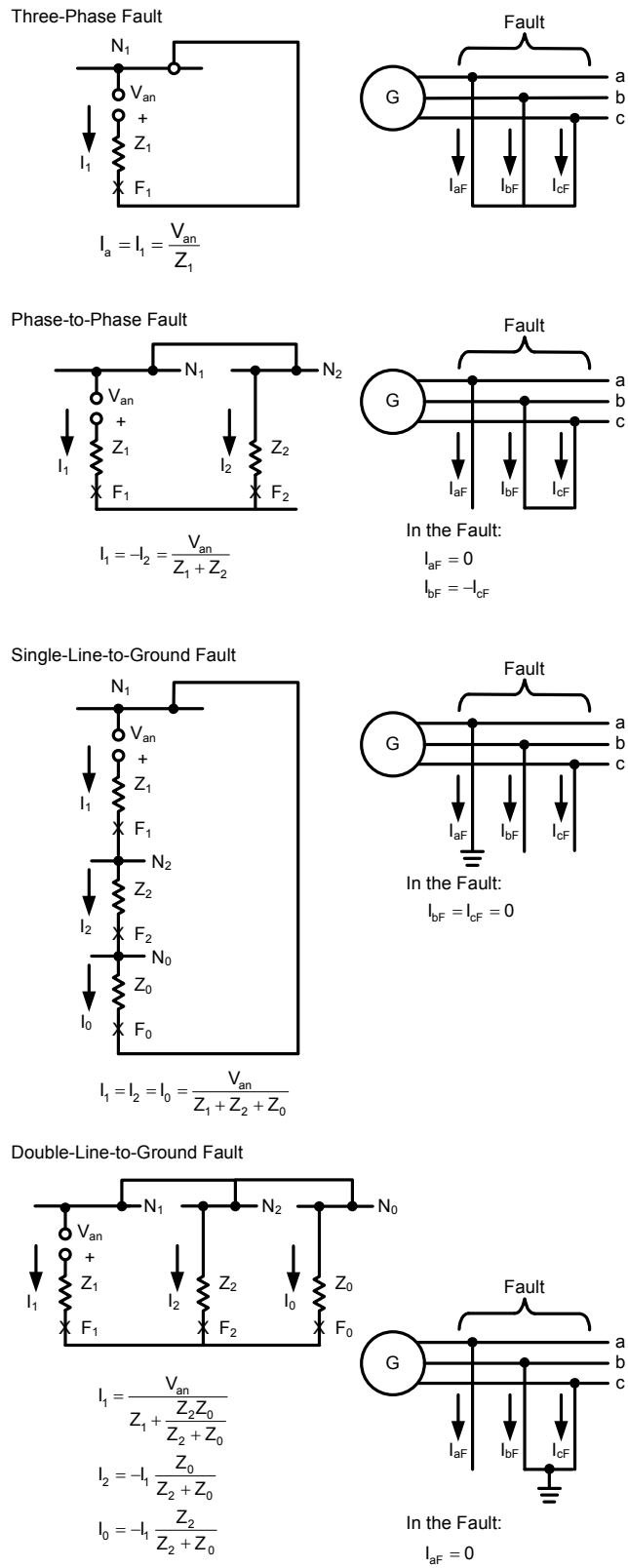

Fig. 5. Fault Sequence Network Connections

As previously stated, the stator winding resistance is generally small enough to be neglected in calculating short circuits. This resistance is important, however, in determining the dc time constants of an asymmetrical short-circuit current. To calculate faults or unbalanced abnormal generator conditions, the positive-, negative-, and zero-sequence networks are interconnected. References [1] and [2] provide more information on this subject. For common fault conditions, these impedances are connected as shown in Fig. 5.

D. Generator Fault Current Decay

Because the generator positive sequence is characterized by three reactances with increasing values over time, its fault current decays with time.

Fig. 6 illustrates a single-phase symmetrical trace of a three-phase, short-circuit waveform (dc component absent), such as might be obtained with oscillographs. The waveform shown in Fig. 6 can be divided into three periods, or time regions, as follows:

- Subtransient Period. This period lasts for a few cycles during which the current magnitude is determined by the generator subtransient reactance (Xd″) and decay time by time constant Td″.
- Transient Period. This period covers a relatively longer time during which the current magnitude is determined by the generator transient reactance (Xd′) and decay time by time constant Td′.
- Steady-State Period. This period is the longest time frame of generator fault current whose magnitude is determined by the generator direct-axis reactance (Xd).

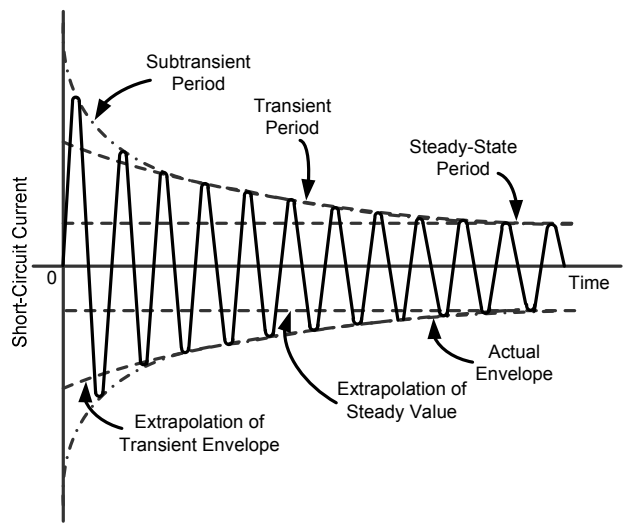

Fig. 6. Symmetrical Trace of a Generator Short-Circuit Current

When dc offsets are considered, generator currents for a three-phase fault resemble those shown in Fig. 7.

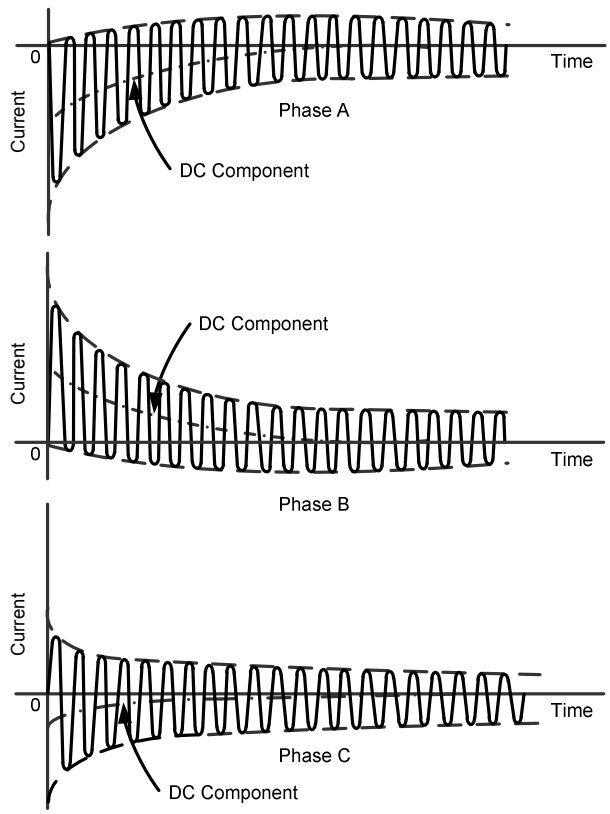

Fig. 7. Generator Short-Circuit Currents for a Three-Phase Fault With DC Offset

A generator fault detected by protective relays is separated from the power system by tripping the generator breaker, field breaker, and prime mover.

The system contribution to the fault will immediately be removed when the generator breaker trips, as illustrated in Fig. 8. However, the generator current will continue to flow after tripping. The generator short-circuit current cannot be "turned off" instantaneously because of the stored energy in the rotating machine. Fault current will continue to flow for several seconds after the generator has been tripped, making generator faults extremely damaging. Generator terminal leads are usually isolated through bus construction to minimize multiphase terminal faults (isolated phase bus). To substantially reduce ground fault currents, the generator is also grounded by increasing the zero-sequence impedance through inserting neutral-ground impedance.

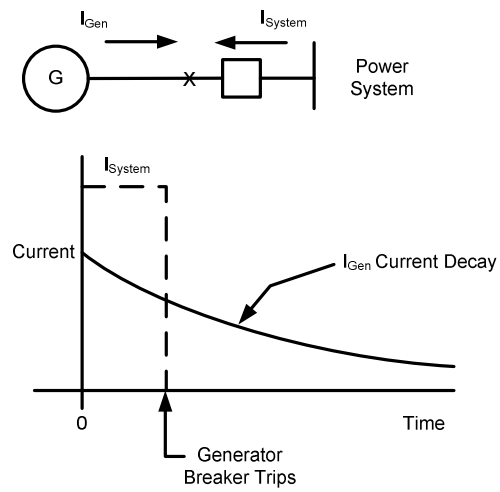

Fig. 8. Generator Terminal Fault Current

V. Generator Grounding Practices

High- and low-impedance grounding represent the two major methods used within the industry to ground generator stator windings. Recently, hybrid grounding has become popular in industrial generators to reduce stator ground fault damage.

A. Low-Impedance Grounding (LRG)

Fig. 9a illustrates a generator grounded through a resistor or reactor. The grounding resistor or reactor is selected to limit the generator ground fault contribution to current between 200 amperes to 150 percent of generator-rated current. LRG is generally used when multiple generating units operate on a common bus or directly connect to load buses without a voltage transformation providing the ground source for the system.

B. High-Impedance Grounding (HRG)

Fig. 9b illustrates a generator grounded using a distribution transformer with a secondary resistor. This grounding method allows the ground fault current to be reduced to low levels, typically 5 to 25 amperes. It is used on unit-connected generators.

C. Hybrid Grounding

Fig. 9c illustrates a hybrid-grounded generator. Combining HRG and LRG, this grounding method is used primarily at industrial facilities to reduce damage during stator ground faults [4]. The generator normally operates with both ground sources in parallel. When a generator ground fault is sensed, the high-speed switch in series with the LRG is tripped during generator shutdown to reduce damaging ground fault current during generator "coast down."

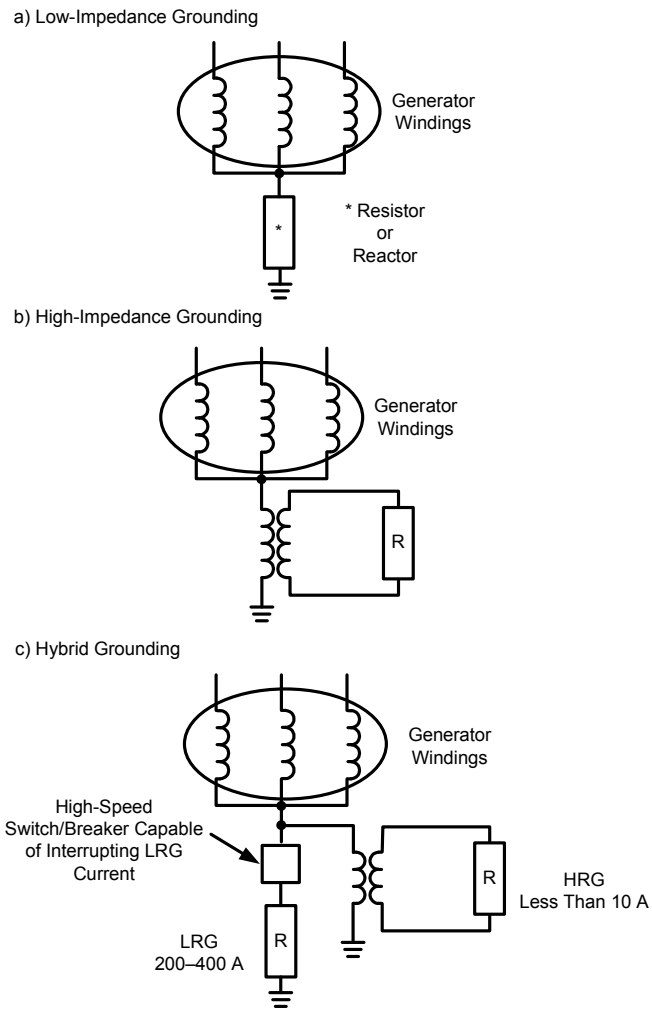

Fig. 9. Generator Grounding Methods

VI. General Discussion of Generator Excitation Control and Generator Capability

A. Excitation Control Basics

A generator excitation system provides the energy for the magnetic field (satisfying magnetizing reactance) that keeps the generator in synchronism with the power system. Present-day exciters fall into two broad categories: those using ac generators (alternators) as a power source and those using transformers.

Fig. 10 illustrates a typical transformer-supplied excitation system. In addition to maintaining synchronism of the generator, the excitation system also affects the amount of reactive power that the generator may absorb or produce. Increasing the excitation current (dc current to the field windings) will increase the reactive power output. Decreasing the excitation current will have the opposite effect and, in extreme cases, may result in loss of generator synchronism with the power system. If the generator operates isolated from the power system and no other reactive power sources control terminal voltage, increasing the level of excitation current will increase the generator terminal voltage and vice versa.

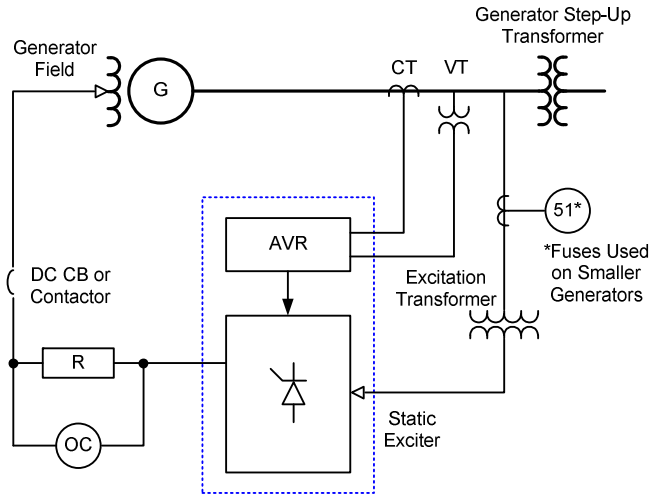

Fig. 10. Typical Transformer-Supplied Excitation System

The most commonly used voltage control mode for generators of significant size that are connected to a power system is the AVR (automatic voltage regulator) mode. In this mode, the excitation system helps to maintain power system voltage within acceptable limits by supplying or absorbing reactive power as required.

In disturbances where short circuits depress the system voltage, electrical power cannot be fully delivered to the transmission system. Fast response from the excitation system helps to increase the synchronizing torque to allow the generator to remain in synchronism with the system. After the short circuit has been cleared, the resulting oscillations of the generator rotor speed with respect to the system frequency will cause the terminal voltage to fluctuate above and below the AVR set point.

Excitation controls prevent the AVR from imposing unacceptable conditions upon the generator. These controls are the underexcitation limiter (UEL) and overexcitation limiter (OEL). The OEL prevents the AVR from supplying more excitation current than the excitation system can supply or the generator field can withstand. The OEL must limit excitation current before the generator field overload protection operates. The UEL prevents the AVR from reducing excitation to such a low level that the generator is in danger of losing synchronism, exceeding machine underexcited capability, or tripping due to exceeding the loss-of-excitation protection setting. The UEL must prevent reduction of field current to a level where the generator loss-of-field protection may operate.

B. Generator Watt/VAR Capability

The capability curve establishes steady-state (continuous) generator operating limits. The generator capability curve is normally published at generator-rated voltage. The curve also shows how the AVR control limits steady-state operation to within generator capabilities. Generator capability is a composite of three different curves: the stator winding limit, the rotor winding limit, and the stator end-iron limit (see Fig. 11).

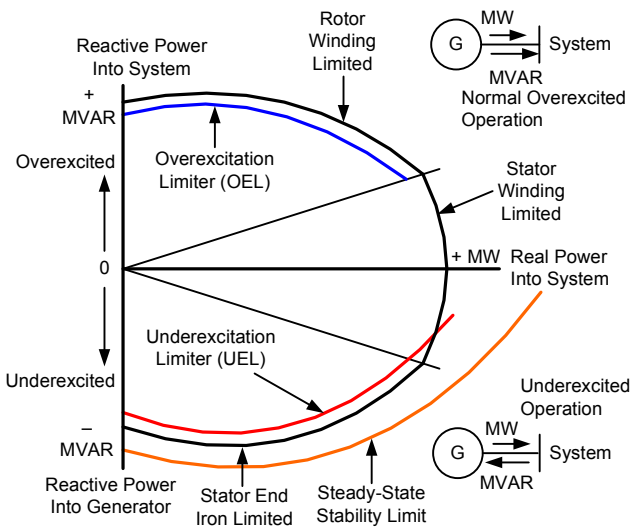

Fig. 11. Typical Generator Capability Curve and Operating Limits

The stator winding limit is a long-term condition relative to the carrying capability of the generator windings. The rotor winding limit is relative to the current-carrying capability of the rotor. It is also associated with longer time conditions. The stator end-iron limit is a relatively short time condition, caused by a reduction in the field current to the point where much of the excitation is supplied from the system to the generator. Significant generator underexcitation saturates the rotor retaining ring. The eddy currents produced by the flux cause localized heating. Hydrogen-cooled generators have multiple capability curves to reflect the effect of operating at different pressures.

The excitation control limiters are intended to limit generator operation to within its continuous capabilities. Fig. 11 illustrates how these limiter set points can be plotted on a typical generator capability curve. Generally, the UEL control setting will also be coordinated with the steady-state stability limit of the generator, which is a function of the generator impedance, system impedance, and generator terminal voltage. Section VII discusses steady-state stability in general terms and a conservative graphical method for estimating the steady-state stability limit for a generator. The OEL limits generator operation in the overexcited region to within the generator capability curve. Some users set the OEL just over the machine capability curve to allow full machine capability and to account for equipment tolerances, while others set it just under the capability curve, as shown in Fig. 11.

Engineers should be aware that more restrictive limits of generator capability could be imposed by the power plant auxiliary bus voltage limits (typically ±5 percent), the generator terminal voltage limits (±5 percent), and the system high-voltage bus minimum and maximum voltage during peak and light load conditions. The high- and low-voltage limits for the auxiliary bus, generator terminal, and system buses are interrelated by the tap position selected for the generator step-up (GSU) and the unit auxiliary transformers. As the power system changes, checking tap settings is necessary to ascertain that adequate reactive power is available to meet power system needs under emergency conditions.

C. P-Q to R-X Conversion

Fig. 11 shows the generator capability on a MW-MVAR (P-Q) diagram. This information is commonly available from all generator manufacturers. Generator protection functions, such as loss-of-field (40) and system backup distance (21), measure impedance; thus, these relay characteristics are typically displayed on a resistance-reactance (R-X) diagram. To coordinate the generator capability with these impedance relays, either convert the capability curve and excitation limiters (UEL and OEL) to an R-X plot or convert impedance relay settings to a P-Q plot. Fig. 12 illustrates this conversion. The CT and VT ratios (R_c/R_v) convert primary ohms to secondary quantities that are set within the relay, and kV is the rated voltage of the generator.

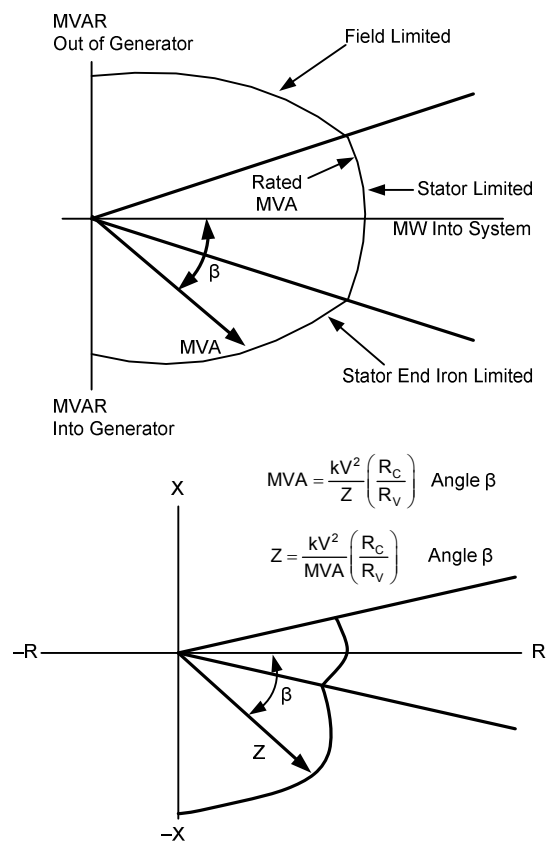

Fig. 12. Conversion From P-Q to R-X and R-X to P-Q Plots

VII. Generator Stability Basics

Generators that are subjected to abnormal conditions can become unstable and lose synchronism. Generator instability can be classified into three types: steady-state, transient, and dynamic.

A. Steady-State Instability

Steady-state instability occurs when too few transmission lines are available to transport power from the generating source to the load center. Fig. 13 illustrates how steady-state instability occurs. The ability to transfer real power (MW) is described by the power transfer equation and plotted graphically.

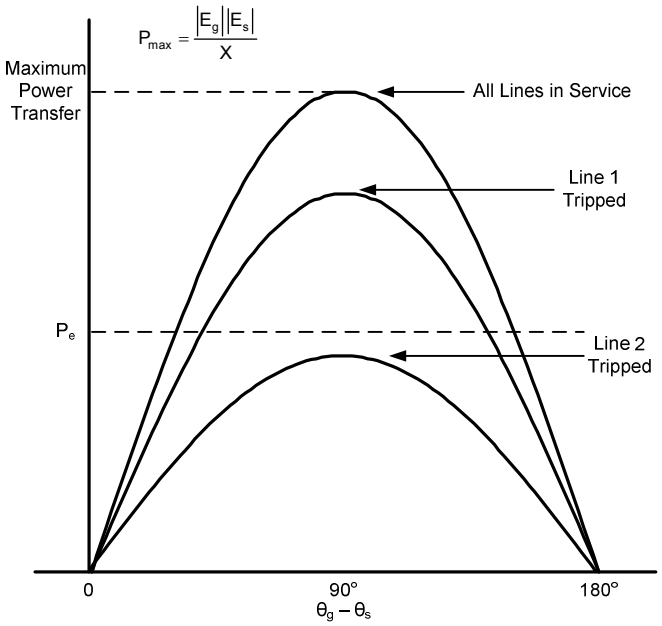

Power Transfer Equation

$$P_e = \frac{|E_g||E_s|}{X}\sin(\theta_g - \theta_s)$$

Where: E_g = Voltage at the Load Center Generation
E_s = Voltage at the Remote Generation
P_e = Electrical Real Power Transfer
X = Reactance Between Local and Remote Generation
θ_g = Voltage Angle at Local Generation
θ_s = Voltage Angle at Remote Generation

Fig. 13. Power Angle Analysis Shows Steady-State Instability

From the power transfer equation in Fig. 13, the maximum power (P_{max}) that can be transmitted is when θg – θs = 90°, i.e., sin 90° = 1. When the voltage phase angle between local and remote generation increases beyond 90 degrees, transmittable power is reduced. The system becomes unstable and usually splits into islands. If enough lines are tripped between the load center and the remote generation supplying it, the reactance (X) between these two sources increases, thereby reducing the maximum power (P_{max}) that can be transferred. The power angle curve in Fig. 13 illustrates this reduction. As Line 1 trips, the height of the power angle curve and maximum power transfer is reduced because the reactance (X) between the two systems has increased. When Line 2 trips, the height of the power angle curve is reduced further to where the transferred power cannot be maintained, and the system becomes unstable.

At this point, the generator is in trouble. During unstable conditions, the power system typically breaks up into islands. If load exceeds generation within an island, frequency and voltage go down. If generation exceeds load, frequency and voltage generally go up. Steady-state instability occurs as transmission line trips increase the reactance between the load center and remote generation. Generally, a voltage drop at the load center is the leading indicator of system trouble, with low frequency occurring only after the system breaks up into islands. Major blackout analysis confirms that voltage is typically the leading edge indicator of the impending collapse of a power system.

A graphical method can determine the generator steady-state stability limit [2]. This method assumes field excitation remains constant (no AVR) and is conservative. When making the calculations, all impedances should be converted to the same MVA base, usually the generator base. The steady-state stability limit is a circle defined by the equations shown in Fig. 14.

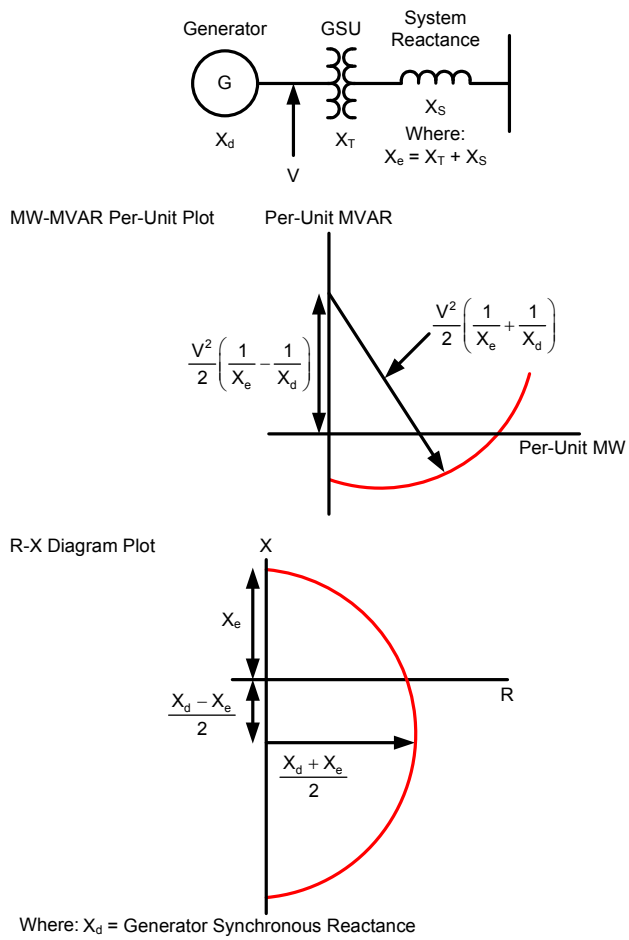

Where: X_d = Generator Synchronous Reactance
X_s = Equivalent System Reactance
X_e = System and Step-Up Transformer Reactance Sum ($X_s + X_T$)
V = Generator Terminal Voltage

Fig. 14. Graphical Method for Steady-State Stability

The graphical method shown in Fig. 14 is widely used in the industry to display the steady-state stability limit on P-Q and R-X diagrams.

B. Transient Instability

Voltage phase angle instability can also occur because of slow-clearing transmission system faults. Called transient instability, it occurs when a fault on the transmission system near the generating plant is not cleared rapidly enough to avoid a prolonged unbalance between the mechanical and electrical generator outputs. A fault-induced transient instability has not caused any major system blackouts in recent years; however, generators need to be protected from damage that can result when transmission system protection is slow to operate. Relay engineers design transmission system protection to operate faster than a generator can be driven out of synchronism, but protection system failures have occurred that resulted in slow-clearing transmission system faults. It is generally accepted that loss-of-synchronism protection at the generator is necessary to avoid machine damage. The larger the generator, the less time it takes to drive the machine unstable for a system fault.

Fig. 15 illustrates a typical breaker-and-a-half power plant substation with a generator and a short circuit on a transmission line near the substation. If the short circuit is three-phase, very little real power (MW) will flow from the generator to the power system until the fault is cleared. The high fault current experienced during the short circuit is primarily reactive or var current. From the power transfer equation (Fig. 13), when E_g drops to almost zero, almost no real power can be transferred to the system. The generator AVR senses the reduced generator terminal voltage and increases the field current to attempt to increase the generator voltage during the fault. The AVR control goes into field-forcing mode where field current is briefly increased beyond steady-state field circuit thermal limits. During the short circuit, the generator mechanical turbine power (P_M) remains unchanged. The resulting unbalance between mechanical (P_M) and electrical power (P_e) manifests as generator acceleration, increasing its voltage phase angle, with respect to the system phase angle, as illustrated in the power angle plot in Fig. 16.

The generator acceleration rate depends on its inertia. If the transmission system fault is not cleared quickly enough, the generator phase angle will advance until the machine is driven out of synchronism with the power system. Computer transient stability studies can establish this critical switching angle and time. The equal area criteria can also be applied to estimate the critical switching angle (θ_c). When area $A_1 = A_2$ in Fig. 16, the generator is just at the point of losing synchronism with the power system. Note that after opening Breakers 1 and 2 (Fig. 15) to clear the fault, the resulting power transfer is reduced because of the increase in reactance (X) between the generator and the power system. This is due to the loss of the faulted transmission line. In the absence of detailed studies, many users establish the maximum instability angle at 120 degrees. Because of the dynamic nature of the generator to recover during fault conditions, the 120-degree angle is larger than the 90-degree instability point for steady-state instability conditions. The time that the fault can be left on the system corresponding to the critical switching angle is called the "critical switching time." If the fault exceeds that time, the generator will lose synchronism by "slipping a pole." For this condition, the generator must be tripped to avoid shaft torque damage. Out-of-step protection, also called loss-of-synchronism protection (78), is typically applied on large generators to trip them, thereby protecting them from shaft torque damage and avoiding a system cascading event [5].

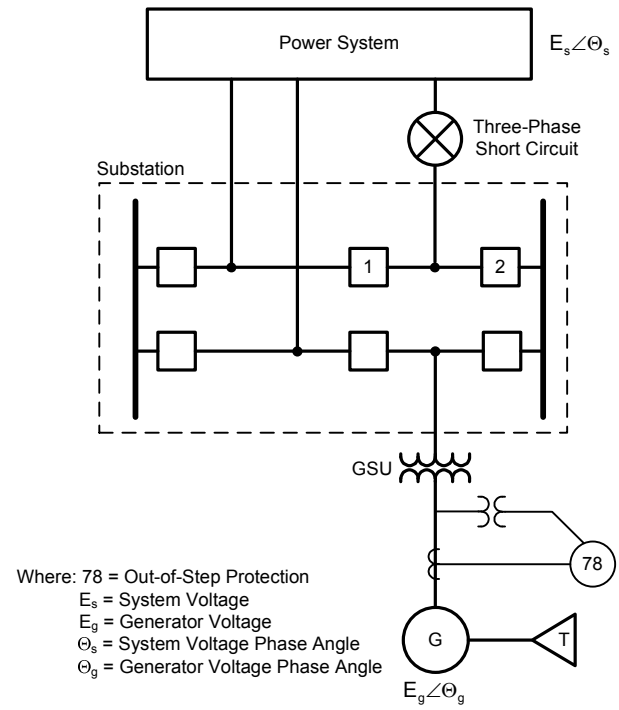

Fig. 15. Typical Breaker-and-a-Half Generating Substation One-Line Diagram

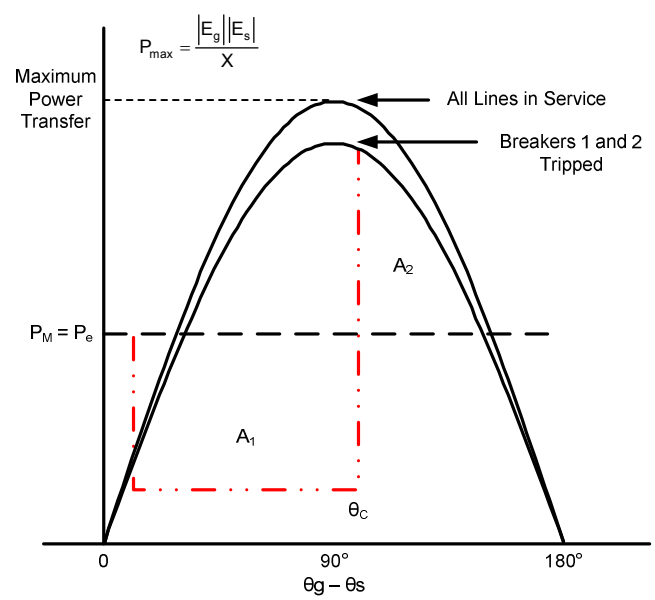

Fig. 16. Power Angle Analysis Shows Transient Instability

C. Dynamic Instability

Often associated with the western United States, dynamic instability occurs when a fast-acting AVR control amplifies rather than damps some small, low-frequency megawatt oscillations that can occur in a power system. It can, however, occur anywhere the load is remote from the generation, particularly if the system is weak. While fast-responding excitation systems are important for improving transient stability, as discussed previously, they can also contribute a significant amount of negative damping. This reduces the natural damping torque of the system, causing undamped megawatt oscillations after a disturbance, such as a system fault.

Small signal stability is defined as the ability of the power system to remain stable in the presence of small disturbances, most often caused by remote faults. Insufficient damping torque can cause generator rotor angle oscillations of increasing amplitude. When these megawatt oscillations grow, the generator can eventually be driven unstable, lose synchronism, and slip a pole. A power system stabilizer (PSS) working with the generator AVR provides positive damping when megawatt oscillations occur.

VIII. IEEE Protection Guides

Table I lists three major IEEE guides that outline the protection requirements and practices for synchronous generators. Sponsored by the IEEE Power System Relaying Committee, these guides provide a wealth of technical information on the electrical protection of synchronous generators.

Table I
Major IEEE Guides for Synchronous Generators

Number	Title
C37.102	IEEE Guide for AC Generator Protection
C37.101	IEEE Guide for Generator Ground Protection
C37.106	IEEE Guide for Abnormal Frequency Protection for Power Generating Plants

IX. Device Numbers

Device numbers concisely specify protection requirements. Numbers 1 to 100 are assigned specific definitions [6]. When discrete relays were the only method of protection, device numbers denoted a specific protective relay. With the advent of multifunction relays, these numbers now describe the functions within such relays.

Fig. 17 illustrates how some device numbers are commonly used to communicate generator protection functions. Table II lists the device numbers and their associated functions that are used for generator protection. Device number designations are referred to throughout the tutorial, so this list provides a handy reference. The definitions provided for each number relate to their application in protecting generators.

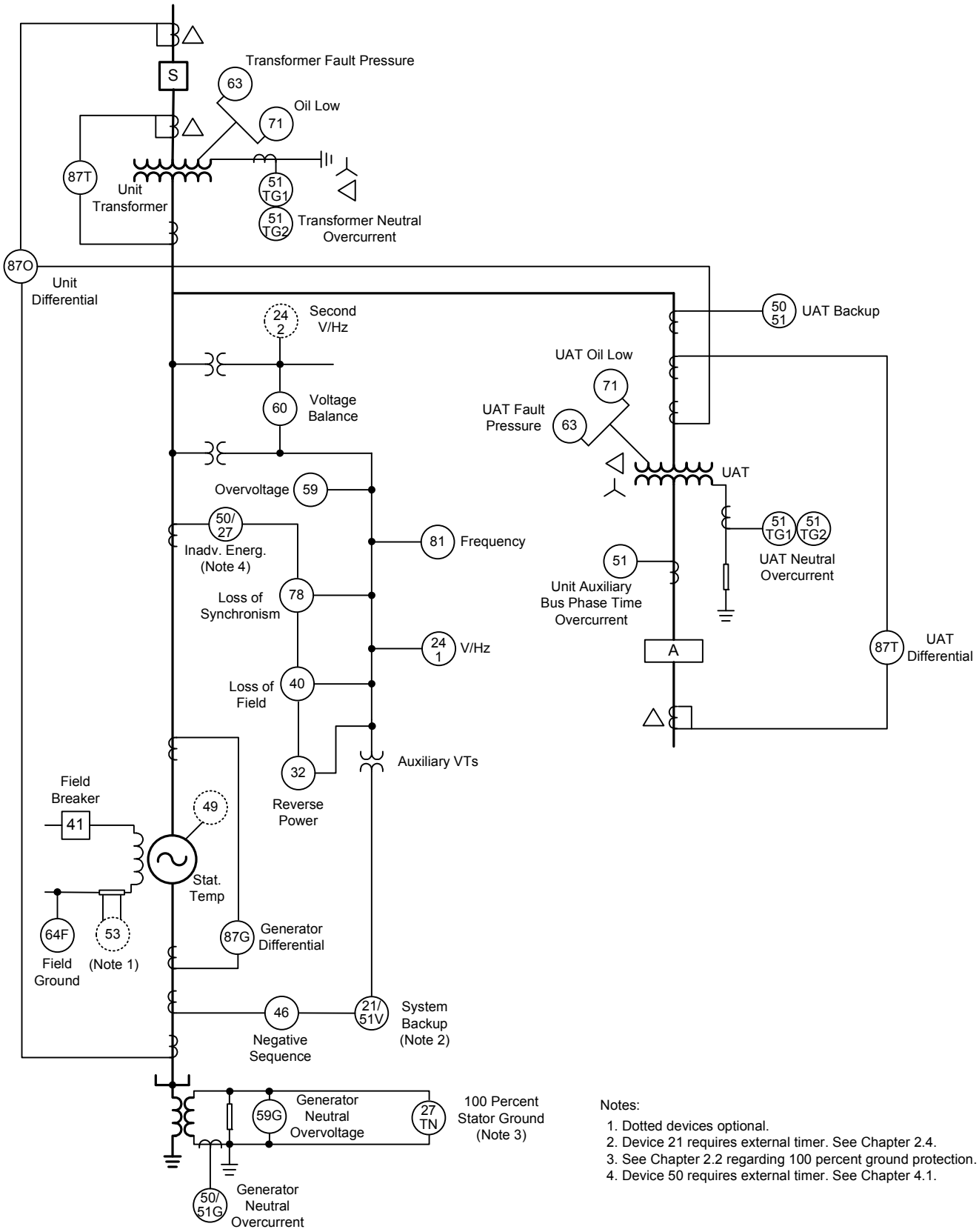

Fig. 17. Typical Unit-Connected Generator Protection

TABLE II
GENERATOR PROTECTIVE DEVICE NUMBERS

Device Number	Function	Tutorial Chapter
11	Multifunction Protection System	5.2
21	Distance Relay—Backup for System and Generator Zone Phase Faults	2.4
24	Volts/Hertz Protection for Generator Overexcitation	3.2
27TN	100 Percent Stator Ground Fault Protection	2.2
32	Reverse Power Relay—Antimotoring Protection	3.5
40	Loss-of-Field Protection	3.3
46	Negative-Sequence Current Unbalance Protection for the Generator	3.4
49	Stator Thermal Protection	
51G	Time-Overcurrent Ground Relay	2.2
51TG 1&2	Backup for Ground Faults	
51V	Voltage-Controlled or Voltage-Restrained Time-Overcurrent Relay—Backup for System and Generator Phase Faults	2.4
59	Overvoltage Protection	3.2
59G	Overvoltage Relay—Stator Ground Fault Protection for a Generator	2.2
60	Voltage Balance Relay—Detection of Blown Voltage Transformer Fuses	3.7
63	Transformer Fault Pressure Relay	
62B	Breaker Failure Timer	2.5
64F	Field Ground Fault Protection	2.3
71	Transformer Oil or Gas Level	
78	Loss-of-Synchronism Protection	3.6
81	Frequency Relay—Both Underfrequency and Overfrequency Protection	3.1
86	Hand-Reset Lockout Auxiliary Relay	5.1
87G	Differential Relay—Primary Phase Fault Protection for the Generator	2.1
87N	Stator Ground Fault Differential Protection	2.2
87T	Differential Relay—Primary Protection for the Transformer	
87O	Differential Relay—Overall Generator and Transformer Protection	2.1

X. REFERENCES

[1] J. L. Blackburn, *Symmetrical Components for Power Systems Engineering*. New York: Marcel Dekker, 1993.

[2] W. A. Elmore, *Protective Relaying Theory and Application*. New York: Marcel Dekker, 2004.

[3] *IEEE Recommended Practice for Protection and Coordination of Industrial and Commercial Power Systems*, IEEE Standard 242-2001.

[4] P. Pillai, B. G. Bailey, J. Bowen, G. Dalke, B. G. Douglas, J. Fischer, J. Jones, D. J. Love, C. J. Mozina, N. Nichols, C. Normand, L. Padden, A. Pierce, L. J. Powell, D. D. Shipp, N. T. Stringer, and R. H. Young, "Grounding and Ground Fault Protection of Multiple Generator Installations on Medium-Voltage Industrial and Commercial Systems," Parts 1–4, *IEEE Transactions on Industry Applications*, vol. 40, issue 1, Jan. 2004.

[5] *IEEE Guide for AC Generator Protection*, IEEE Standard C37.102-2006.

[6] *IEEE Standard for Electrical Power System Device Function Numbers, Acronyms, and Contact Designations*, IEEE Standard C37.2-2008.