Stator Ground Fault Protection

Wayne Hartmann and Joe T. Uchiyama

***Abstract*—This part of the tutorial deals with generator stator neutral grounding and the protection schemes used to detect stator ground faults. Two types of grounding methods, high- and low-impedance, are described. These methods represent the major practices used within the industry to ground generator stator windings. In addition, predominant protection schemes are also described.**

I. Introduction

The stator grounding method used in a generator installation determines the generator performance during ground fault conditions. If the generator is solidly grounded, it will deliver a very high-magnitude current to a single-line-to-ground (SLG) fault at its terminals, accompanied by a 58 percent reduction in the phase-to-phase voltages involving the faulted phase and a modest neutral voltage shift. If the generator is ungrounded, it will deliver a negligible amount of current to a bolted SLG fault at its terminals, accompanied by no reduction in the phase-to-phase terminal voltages and a full neutral voltage shift. These conditions represent the extremes in generator grounding, with normal practice falling predictably in between. In practice, generators are rarely operated solidly grounded or ungrounded, with the possible exception of low-voltage systems.

A high magnitude of fault current is available when a generator is solidly grounded. This is not acceptable because equipment damage will be severe. Furthermore, shutting down the generator by tripping the generator breaker, excitation (field) breaker, and prime mover does not cause the fault current to immediately go to zero. The flux trapped in the field will result in the fault current slowly decaying over a number of seconds after the generator is tripped, which can cause substantial damage.

At the other extreme, operating an ungrounded generator provides negligible fault current, but the line-to-ground voltages on the unfaulted phases can rise considerably during ground faults, which could cause the failure of generation equipment insulation. As a result, stator windings on major generators are grounded in a manner that will reduce fault current and overvoltages and yet provide a means of detecting the ground fault condition quickly enough to prevent burning of core iron. Two types of grounding are widely used within the industry. They are categorized as high- and low-impedance grounding. An emerging method known as hybrid grounding is also used as an alternative solution.

II. Low-Impedance Stator Grounding

The low-impedance stator grounding method is illustrated in Fig. 1, Fig. 2, and Fig. 3.

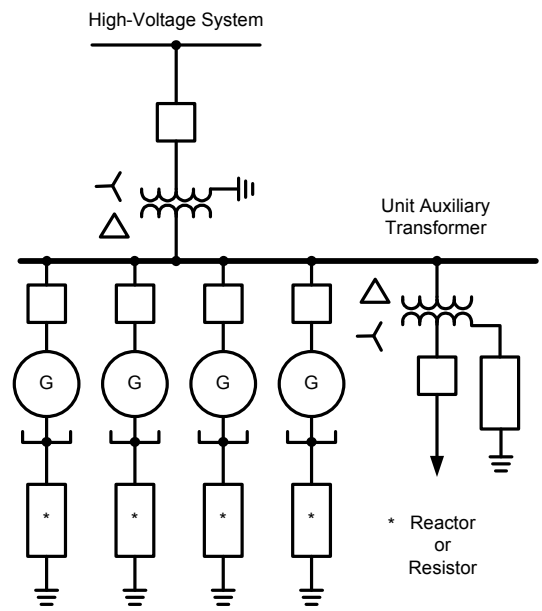

Fig. 1. Generators Bussed Together on a Common Bus Sharing a GSU (Generator Step-Up) Transformer [1]

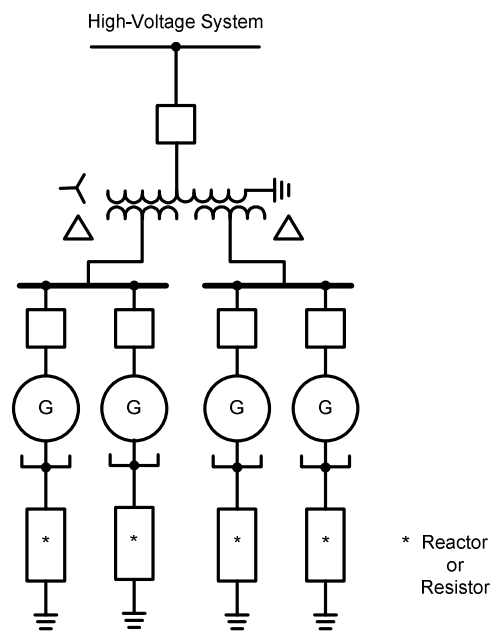

Fig. 2. Groups of Bussed Generators Sharing GSU Secondary Windings [1]

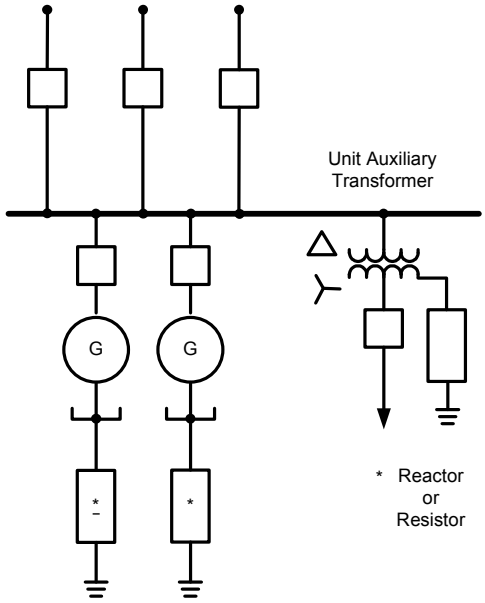

Fig. 3. Generators Connected Directly to a Distribution System Bus [1]

The grounding resistor or reactor is selected to limit the generator contribution to an SLG fault to a range of currents generally between 200 amperes and 150 percent of rated load current. With this wide range of available fault current, phase differential relaying can provide some ground fault protection for higher levels of ground fault currents. However, the differential relay will not provide ground fault protection for the entire stator winding. Supplemental protection is commonly provided. Fig. 4 is an illustration of a ground differential scheme that provides this enhanced sensitivity. This scheme, employing ground differential protection, is fully described in [2]. The relay is connected to receive residually derived neutral current from the generator terminals as one input and the generator ground current as the other input.

The biased differential comparison ensures that a positive restraint exists for an external fault even though the current transformers (CTs), R_{CN} and R_{CL}, have substantially different performance characteristics. This scheme provides excellent security against misoperation for external faults and provides very sensitive detection of internal ground faults. A similar scheme using a digital relay is possible without the need for an auxiliary CT.

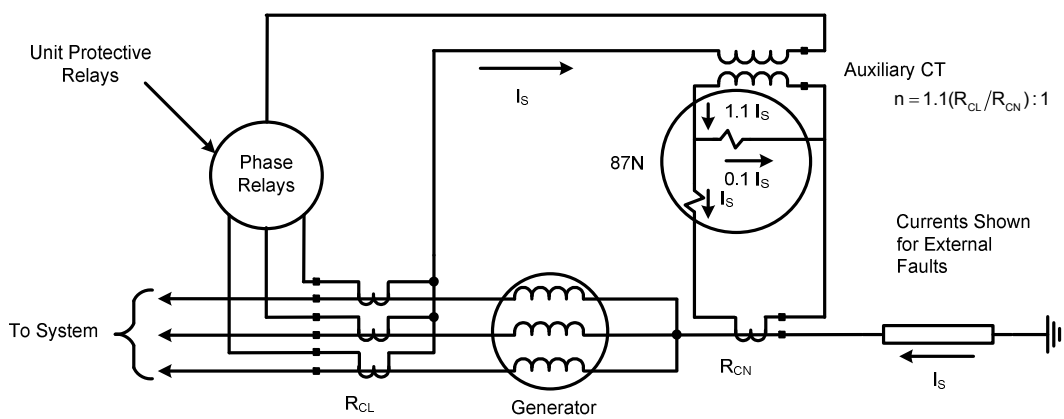

Fig. 4. Generator Ground Differential Using a Product-Type Relay [1]

III. High-Impedance Stator Grounding

High-resistance generator neutral grounding is illustrated in Fig. 5. This scheme is primarily used on unit-connected systems having a GSU transformer with windings connected delta on the generator side and grounded-wye on the system side; however, it can also be used on cross-compound generators where one winding is generally high-impedance grounded.

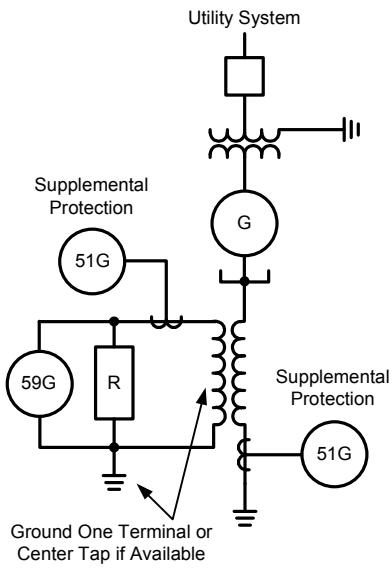

Fig. 5. High-Impedance Grounded Generator [1]

High-resistance generator neutral grounding uses a distribution transformer with a primary voltage rating greater than or equal to the line-to-neutral voltage rating of the generator and a secondary rating of 120 or 240 V. The distribution transformer should have sufficient overvoltage capability so that it does not saturate on SLG faults with the machine when operated at 105 percent of rated voltage. The secondary resistor is usually selected so that, for an SLG fault at the generator terminals, the power dissipated in the resistor is approximately equal to the reactive volt-amperes in the zero-sequence capacitive reactance of the generator windings, its leads, and the windings of any transformers connected to the generator terminals. Using this grounding method, an SLG fault is generally limited to 3 to 25 primary amperes. As a result, this level of fault current is not sufficient to operate generator differential relays. The Appendix provides a detailed example of how to determine the size of the ground resistor to meet the requirements cited previously as well as calculate the resulting ground currents and voltages.

IV. Conventional High-Impedance Stator Winding Protection Methods—Neutral Overvoltage/Overcurrent Scheme

The most widely used protection scheme in high-impedance grounded systems is a time-delayed overvoltage relay (59G) connected across the grounding resistor to sense zero-sequence voltage 3V0, as shown in Fig. 5. The relay used for this function is designed to be sensitive to fundamental frequency voltage and insensitive to third-harmonic and other zero-sequence harmonic voltages that are present at the generator neutral.

Since the grounding impedance is large compared to the generator impedance and other impedances in the circuit, the full phase-to-neutral voltage will be impressed across the grounding device for a phase-to-ground fault at the generator terminals. The voltage at the relay is a function of the distribution transformer ratio and the location of the fault. The voltage will be a maximum for a terminal fault and decreases from the generator terminals toward the neutral. Typically, the overvoltage relay has a minimum pickup setting of approximately 5 V. With this setting and with typical distribution transformer ratios, this scheme is capable of detecting faults to within approximately 5 percent of the stator neutral.

The time setting for the overvoltage relay is selected to provide coordination with other system protective devices. Two specific areas of concern are VT (voltage transformer) connection and coordination with other relays.

A. VT Connection

When grounded wye-grounded wye VTs are connected at the machine terminals, the neutral ground overvoltage relay should be coordinated with VT transformer fuses to prevent tripping the generator for VT secondary ground faults. If the relay time delay is not acceptable, the coordination problem can be alleviated by grounding one of the secondary phase conductors instead of the secondary neutral. Thus, a secondary ground fault results in a phase-to-phase VT fault, which will not operate the neutral ground overvoltage relay. However, when this technique is used, the coordination problem still exists for ground faults on the secondary neutral; thus, its usefulness is limited to those applications where the exposure on secondary neutral-to-ground faults is small.

B. Coordination With Other Relays

The voltage relay may have to be coordinated with system relaying for system ground faults. System phase-to-ground faults induce zero-sequence voltages at the generator neutral due to capacitive coupling between the windings of the unit transformer. This induced voltage appears on the secondary of the grounding distribution transformer and can cause operation of the zero-sequence voltage relay.

A time-overcurrent relay can be used as backup protection when the generator is grounded through a distribution transformer with a secondary resistor. The CT supplying the overcurrent relay may be located either in the primary neutral circuit or in the secondary circuit of the distribution transformer, as shown in Fig. 5. When the CT is connected in the distribution transformer secondary circuit, a CT ratio is selected so that the relay current is approximately equal to the maximum primary current in the generator neutral. An inverse-time or very inverse-time delay overcurrent relay is generally used for this application. The pickup setting of the overcurrent relay should be no less than 135 percent of the maximum value of current measured in the neutral under

nonfault conditions. In general, the overcurrent relay provides less sensitive protection than the overvoltage relay that detects zero-sequence voltage. As with the overvoltage relay, the overcurrent relay must be coordinated with the VT fuses and with the system ground relaying.

V. 100 Percent Stator Winding Ground Fault Protection Methods

Conventional protection for stator ground fault detection on high-impedance grounded systems was discussed in Section IV. These protective schemes are straightforward and dependable; however, these relays can provide protection for only about 80 to 95 percent of the stator windings. This is due to generator construction imperfections and the subsequent small amounts of zero-sequence current that will flow in the generator ground. This small amount of zero-sequence current makes it impossible for conventional ground fault detection relays to remain selective when set too low. It is important to protect major generators with an additional ground fault protection system so that fault coverage for 100 percent of the winding is obtained. The techniques for detection of ground faults that cover 100 percent of stator windings can be divided into three categories:

- Third-harmonic voltage-based techniques
- Neutral or residual subharmonic voltage injection

A. Third-Harmonic Voltage-Based Techniques

Third-harmonic voltage components are present at the terminals of nearly every machine to varying degrees; they arise due to the nonsinusoidal nature of rotor flux and vary based on the differences in design and manufacture. If present in a sufficient amount, this voltage is used by the schemes in this category to detect ground faults near the neutral. The third-harmonic voltages measured at the generator neutral or terminals or both are used to provide protection. Before discussing the techniques and their operation, it is worthwhile to look at the characteristic of third-harmonic voltages, which these schemes use as their relaying signals for fault detection. Fig. 6 shows the third-harmonic voltages (V_3RD) present at the neutral and terminals of a typical generator during different load conditions: (a) under normal operation, (b) for a fault at the neutral end, and (c) for a fault at the generator terminals.

The following observations can be made from Fig. 6:

- The level of third-harmonic voltage at the neutral and generator terminals is dependent on the operating conditions of the generator. The voltage is usually higher at full load than at no load as depicted in Fig. 6, except when generators are operated as underexcited synchronous condensers.
- There is a point in the windings, typically near the middle, where the third-harmonic voltage is zero. The exact position of this point depends on operating conditions and generator design.
- As the fault position approaches the generator neutral, the third-harmonic voltage at the neutral decreases, and it increases at the terminals. For a ground fault at the neutral, the third-harmonic voltage at the neutral becomes zero.
- As the fault position approaches the generator terminals, the third-harmonic voltage at the terminals decreases while increasing at the neutral. For a ground fault at the terminals, the third-harmonic voltage at the terminals becomes zero.
- The level of third-harmonic voltage varies from one machine to another depending on the design. The third-harmonic levels of any generator should be measured with the generator connected and disconnected from the unit transformer before enabling any third-harmonic-based protection schemes. This is done to ensure that adequate third-harmonic voltage levels exist to operate the protective elements during all expected loading conditions.

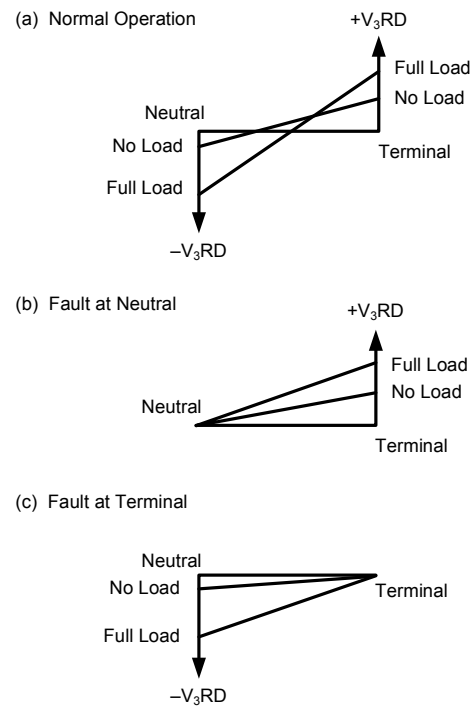

Fig. 6. Third-Harmonic Voltage for Different Conditions in a Typical Generator [1]

Third-harmonic voltage-based techniques include:

- Third-harmonic neutral undervoltage technique [3]
- Third-harmonic residual terminal overvoltage technique [1]
- Third-harmonic comparator (differential) technique [4]

1) Third-Harmonic Undervoltage Technique

This technique uses the fact that for a fault near the neutral, the level of third-harmonic voltage at the neutral decreases. Therefore, an undervoltage relay operating from third-harmonic voltage measured at the neutral end could be used to detect the faults near the neutral. Ground faults in the remaining portion of the windings can be detected by conventional ground fault protection, e.g., an overvoltage relay (59G), which operates on the 60 Hz neutral voltage. The combination of both relays provides 100 percent stator winding protection. A simplified protection scheme using this technique is shown in Fig. 7.

The relay signals are taken from voltage inputs measured across the neutral resistor. Overvoltage protection uses the 60 Hz (fundamental) tuned overvoltage level detector (59G) and a timer. This protection is supplemented by an undervoltage protection, which uses the 180 Hz (third harmonic) tuned undervoltage (27N3) level detector and a timer.

The settings for the third-harmonic undervoltage element and the fundamental overvoltage and/or overcurrent element are derived to overlap coverage, so 100 percent stator winding ground fault coverage is achieved.

The third-harmonic undervoltage relay must be blocked to avoid false tripping during generator shutdown or startup. A supervisory overvoltage (59C) relay can provide this protection.

Normally, the third-harmonic undervoltage protection can provide adequate protection for 0 to 30 percent of the stator winding measured from the neutral toward the machine terminal. The undervoltage relay setting should be well below the minimum third-harmonic voltage present at the neutral during expected real and reactive power loading of the machine.

In some cases, the generator does not develop significant third-harmonic voltage until it is loaded. In this case, supervision using an overcurrent relay can be provided. The overcurrent relay operates when the current exceeds its pickup value; therefore, under light load conditions and when the main breaker is open, the third-harmonic undervoltage relay is blocked from operation. Other supervision such as real power, reactive power, and breaker contact may also be employed. Third-harmonic tuned undervoltage protection operates for open and short circuits of primary or secondary windings of the neutral grounding transformer but is not able to detect an open circuit in the secondary grounding resistance.

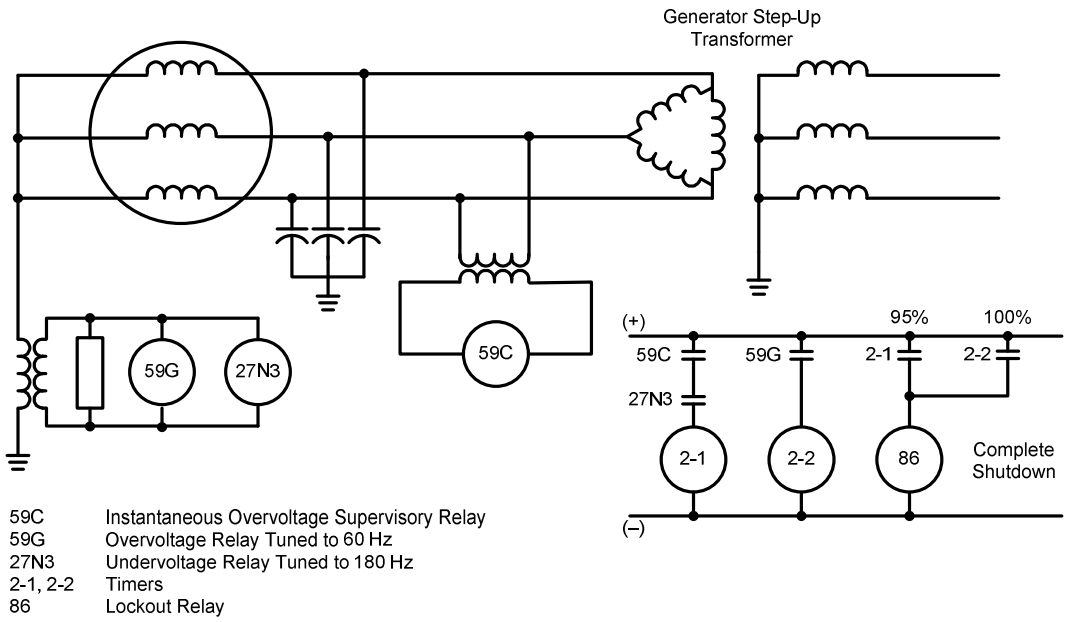

Fig. 7. A Third-Harmonic Undervoltage Ground Fault Protection Scheme [1]

2) Third-Harmonic Terminal Residual Voltage Technique

This technique is based on the fact that for a fault near the neutral, the level of third-harmonic overvoltage (59T) at the generator terminals increases. Therefore, an overvoltage relay using third-harmonic voltage (59T) at the terminals of a generator can be used for detecting faults near the neutral. As before, ground faults in the remaining portion of the windings can be detected by the conventional 95 percent protection, e.g., an overvoltage relay (59G) that operates on 60 Hz neutral voltage. Using both of these relays (59G and 59T) would provide 100 percent protection of stator windings by covering different portions of the windings. A simplified protection scheme using this technique is shown in Fig. 8.

Residual voltage at the machine terminals is supplied by the wye-grounded broken-delta transformer. The 180 Hz (third-harmonic) component is used by an overvoltage (59T) detector. At the neutral end, the relaying signal is taken across the neutral resistor. The 60 Hz (fundamental) component is used by an overvoltage (59G) level detector. Digital relays allow the residual voltage at the terminals to be calculated internally without the need for auxiliary VTs.

For a ground fault near the neutral, the level of third-harmonic voltage at the generator terminals becomes elevated, and the third-harmonic overvoltage relay operates. This relay must be set in such a way that it does not respond to the maximum third-harmonic voltage present during normal machine operation. Also, the settings of the overvoltage relays at the neutral end and at the generator terminals should be such that detection of faults in the entire stator windings is ensured.

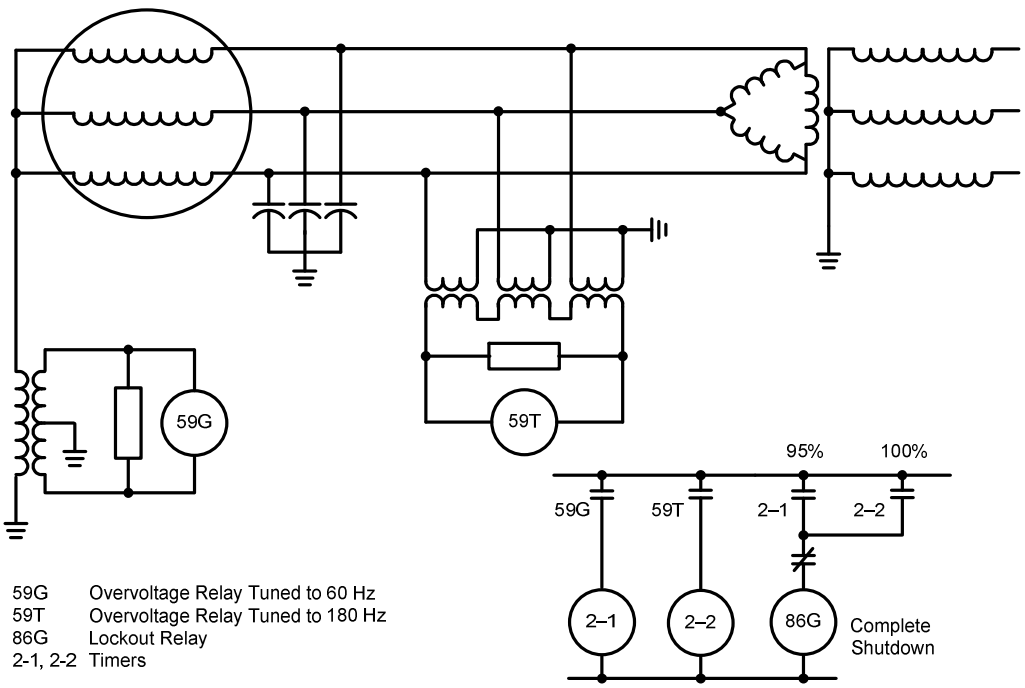

Fig. 8. Third-Harmonic Residual Terminal Voltage-Based Ground Fault Protection Scheme [1]

3) Third-Harmonic Comparator Technique

This technique compares the magnitude of the third-harmonic voltage at the generator neutral to that at the generator terminals. The scheme is based on the premise that the ratio of the third-harmonic voltage at the generator terminals to that at the generator neutral is almost constant during the normal operation of the generator. This ratio is upset for ground faults near the neutral or terminal end of the stator windings. Fig. 9 shows a simplified diagram of the comparator scheme.

The basic operating principle of this scheme is the differential principle employing the 180 Hz (third-harmonic) voltages obtained at the neutral and terminal ends of the stator winding. Any difference voltage will cause operation of the differential element. This scheme assumes that the ratio of the third-harmonic voltage at generator terminals to third-harmonic voltage at generator neutral terminals remains approximately constant during normal conditions. If the ratio of the third-harmonic terminal to third-harmonic neutral voltage changes, a difference voltage appears, and the differential relay operates unless a less sensitive setting was employed to accommodate the ratio changes. Also, slight variations in this ratio during normal operation may require reducing the relay sensitivity.

The settings of the conventional 95 percent protective relay (59G) and those of the third-harmonic differential relay (59D) should be chosen in such a way that fault detection coverage for the entire stator winding is ensured. The third-harmonic differential relay detects ground faults near the neutral as well as at the terminals. The conventional 95 percent ground fault relay detects faults in the upper portion of the windings and overlaps much of the windings protected by the third-harmonic differential relay. The third-harmonic differential relay sensitivity is minimal for a fault near the middle of the winding. At this point, the difference between the third-harmonic voltages at neutral and at terminals is nearly equal to the relay setting. The relay setting should be determined from field tests during commissioning. As an example, Table I shows the magnitude of the third-harmonic voltage at the neutral and at the terminals and their ratio for different operating conditions for a typical generator. The need for multiple VTs and the necessity of field tests for determination of relay settings are the weak points of this scheme. However, this scheme provides the optimum 100 percent fault coverage.

TABLE I
MAGNITUDES OF THIRD-HARMONIC VOLTAGE FOR A TYPICAL GENERATOR [1]

Unit Load		180 Hz RMS Voltage		Voltage Ratio
MW	MVAR	Neutral	Terminal	Terminal/Neutral
0	0	2.8	2.7	1.08
7	0	2.5	3.7	1.48
35	5	2.7	3.8	1.41
105	5	4.2	5.0	1.19
175	25	5.5	6.2	1.13
340	25	8.0	8.0	1.00

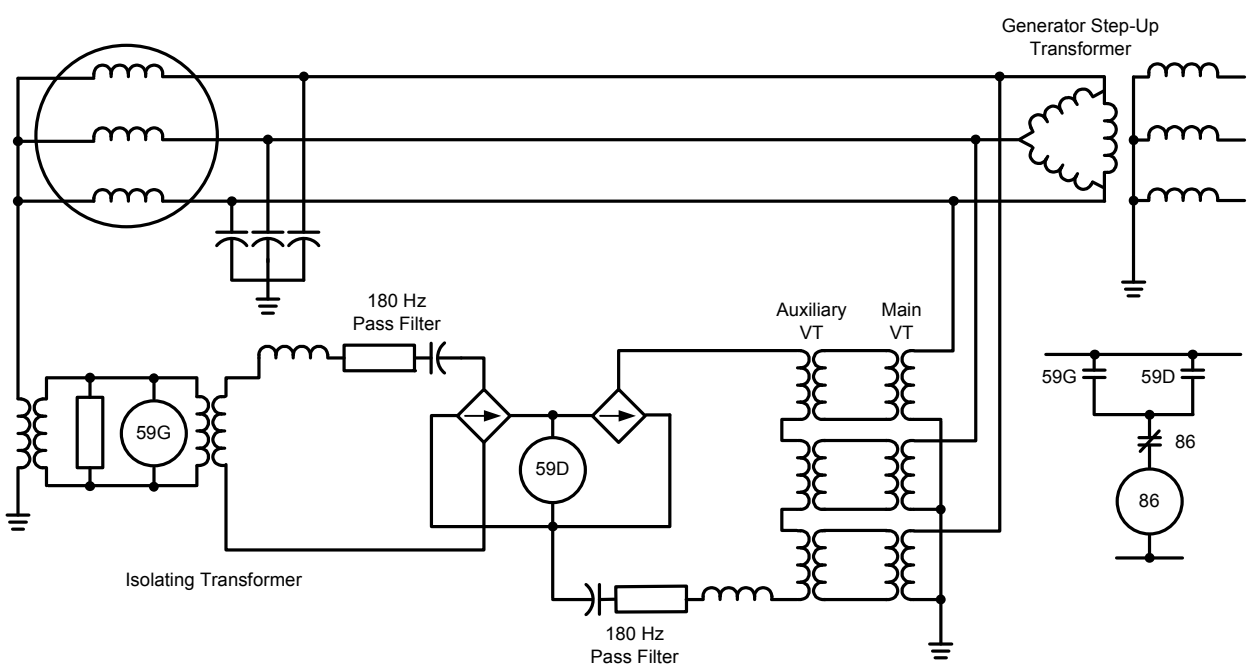

59G Conventional Overvoltage Relay Tuned to 60 Hz
59D Voltage Differential Relay Tuned to 180 Hz (Third Harmonic)

Fig. 9. Third-Harmonic Comparator Based on Ground Fault Protection Scheme [1]

B. Two Types of Subharmonic Injection Schemes

Due to design variations, certain generating units may not produce sufficient third-harmonic voltages to apply the ground fault protection schemes based on third-harmonic signals. Alternate fault detection techniques are needed in these situations. Voltage injection schemes detect ground faults by injecting voltage at the neutral or residually in a broken-delta VT secondary at the terminals. Complete ground fault protection is available when the generator is at a standstill, on turning gear or during startup provided that the injected voltage source does not obtain power from the generator VTs. The subharmonic sinusoidal voltage injection scheme continuously injects a 20 Hz signal through a signal generator in the generator neutral (Fig. 10). The resultant 20 Hz current is measured. When a ground fault occurs, the 20 Hz current increases and causes the relay to operate. The subharmonic coded voltage injection scheme injects a coded signal (+/– cosine waves) at a subharmonic frequency (Fig. 11), which can be synchronized with the system frequency. One such scheme injects a frequency of 15 Hz (a quarter of the fundamental frequency in 60 Hz systems) in the generator neutral (Fig. 11). The resultant 15 Hz current is measured. When a ground fault occurs, the 15 Hz injection reference signals (Y) and measurement values (X) will be offset, causing the relay to operate. The 15 Hz injection signal is synchronized to the 60 Hz generator terminal voltage.

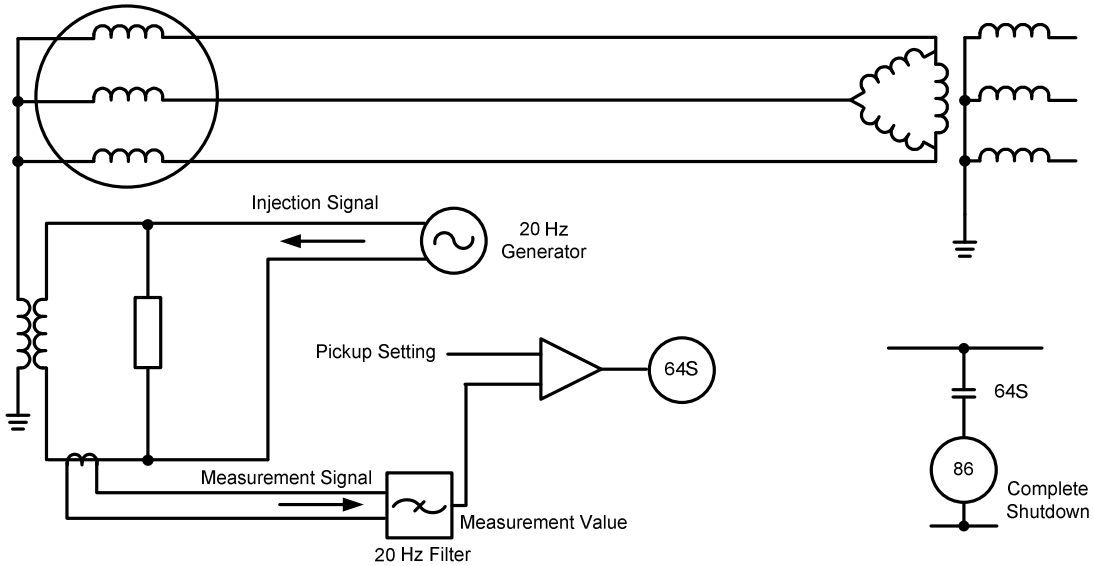

Fig. 10. Subharmonic Sinusoidal Voltage Injection Scheme [1]

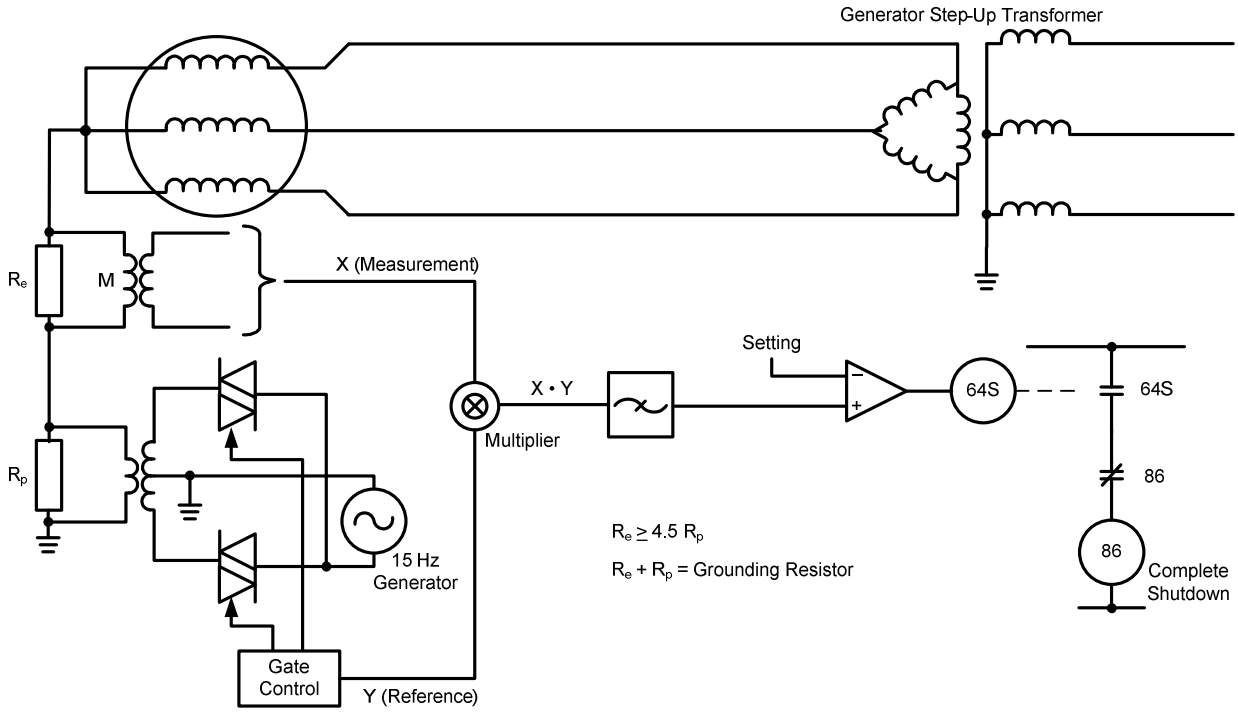

Fig. 11. Subharmonic Coded Voltage Injection Scheme [1]

The voltage injection schemes operate with the same sensitivity for faults over the entire range of the windings. They provide 100 percent ground fault protection independent of the 95 percent ground fault schemes. In addition, these schemes are self-monitoring and have sensitivity independent of system voltage, load current, and frequency. The use of subharmonic frequencies offers improved sensitivity because of the higher impedance path of the generator capacitances at these frequencies. Also, the integrations over a half cycle of the subharmonic frequency result in zero contributions from the signals of system frequency and harmonics (i.e., 60 Hz, 120 Hz, 180 Hz, etc.) and therefore do not influence the measurements. The high cost associated with providing and maintaining a reliable subharmonic source is a disadvantage. Subharmonic voltage injection schemes can detect open circuits in the grounding transformer primary or secondary as this causes a decrease in the 20 Hz current and not an increase as needed by this scheme to indicate a fault. An undercurrent condition is used to give an alarm for indicating a grounding system problem or loss of subharmonic source.

VI. Hybrid Generator Ground Fault Protection Methods

This scheme is a combination of low-resistance grounding (normal operation, 3I0 = 200~400 A) and high-resistance grounding (3I0 = 3~25 A), as shown in Fig. 12. The hybrid grounding may be applied in industrial applications with generators directly connected to a bus that services local loads. This application requires careful rating of the components.

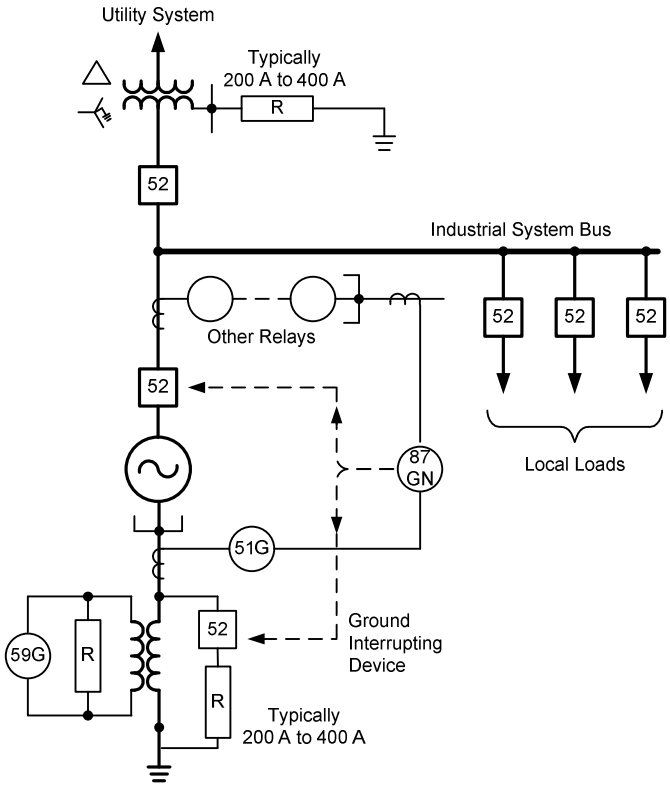

Fig. 12. Hybrid Grounding Scheme [1]

The generator normally operates with the low-impedance ground in parallel with the high-impedance ground. The machine has both high-impedance and low-impedance grounds and provides a source of ground current for ground relay operation on the feeders supplied from the bus (predominantly by low-impedance ground source). If an internal ground fault within the machine occurs, the ground differential relay (87GN) and/or instantaneous overcurrent relay (51G) operates and issues a command to open the ground interrupting device in series with the low-impedance grounding path of the GSU transformer connection and vacuum ground interrupting device in the neutral circuit. Once the low-impedance grounding paths are opened, only the high-impedance grounding path is left, limiting the ground fault current to low levels (5~25 A) to mitigate damage in the stator winding.

VII. Tripping Mode

All stator ground detection methods in this section should be connected to trip and shutdown the generator.

In high-impedance grounded hydro machines, it may be acceptable to delay lockout tripping for stator ground faults until the machine is unloaded (until the governor control brings down the turbine speed to the no-load spinning state). Also, another consideration is that the delayed tripping avoids subjecting a machine or its bearing to high speed from sudden load rejection.

VIII. Appendix

The appendix presents an example of how to calculate the zero-sequence fault quantities and how to determine the value and ratings of the grounding elements (resistor and transformer) used in the conventional 95 percent, 60 Hz tuned overvoltage relay with a high-impedance grounded protection scheme. A 975 MVA, 22 kV generator is unit-connected to a 345 kV transmission system and grounded through a distribution transformer, as shown in Fig. 13.

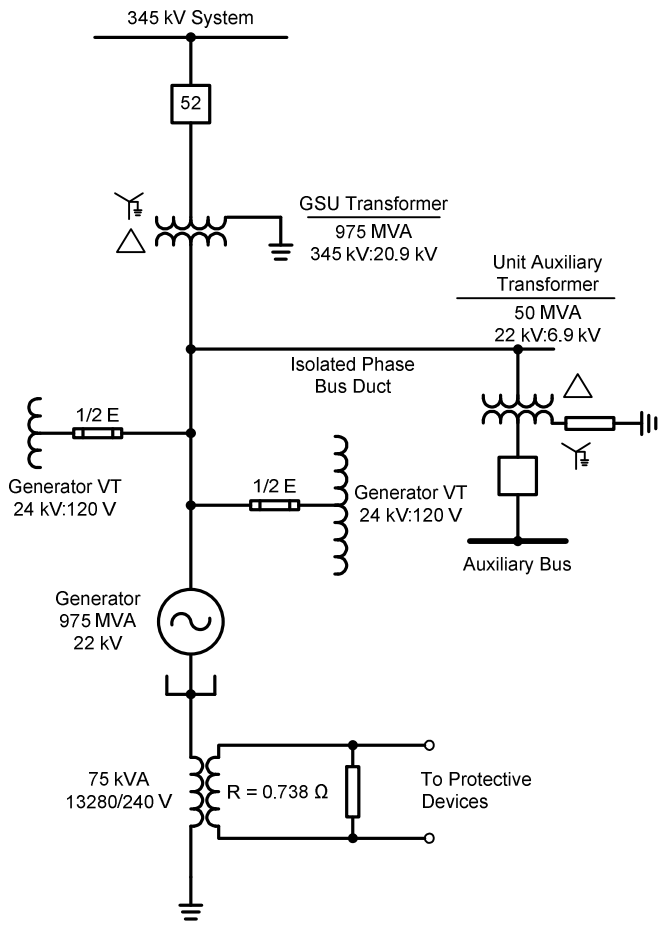

Fig. 13. An Example System [1]

A. Distributed Capacitances for Grounding Resistor and Distribution Transformer

Due to high-resistance grounding, the capacitances to ground in the system are not usually taken into account for short-circuit calculations because of their high-reactance values relative to the series inductive reactances in the system. In general, these are distributed capacitances associated with generator stator windings, the generator surge capacitors and arresters, and the GSU transformer low-voltage windings.

For the determination of the grounding resistor and distribution transformer ratings, these capacitances can be combined and modeled as a single capacitor, as shown in Fig. 14. These capacitances typically account for more than 95 percent of the system capacitance to ground. Other sources are the isolated phase bus ducts, the unit auxiliary transformer high-voltage windings, and the high-voltage windings of any instrument transformers (i.e., generator VTs).

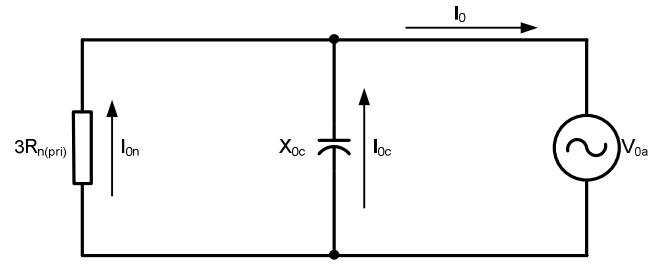

Fig. 14. Reduced Approximate Symmetrical Component Equivalent Circuit

Generally, the capacitance values must be obtained from the equipment manufacturer; however, insulation or power factor tests are excellent sources as well. All capacitance values used for these calculations should be phase-to-ground on a per-phase basis. Note that capacitance in farads or microfarads will need to be converted to capacitive reactance (ohms) at 60 Hz.

Assume the phase-to-ground capacitive reactance of the generator, transformers, leads, and associated equipment in the system shown in Fig. 13 is X_{0c} = 6780 Ω per phase. The ohmic value of the secondary resistor has been selected so that when reflected across the distribution transformer, the resulting resistance, R_n, is equal to 1/3 of X_{0c}:

$$R_{n(pri)} = 6780\,\Omega\left(\tfrac{1}{3}\right) = 2260\,\Omega \tag{1}$$

$$\begin{aligned} R_{n(sec)} &= \left(V_s/V_p\right)^2 R_{n(pri)} \\ &= \left(240/13280\right)^2 (2260\ \Omega) \\ &= 0.738\ \Omega \end{aligned} \tag{2}$$

For the purpose of discussion, an SLG fault will be assumed at the terminals of the generator. In terms of the resulting fault quantities (voltage and current), this location yields the worst case. That is, the neutral shift (or development of 3V0 across the distribution transformer secondary winding) and fault current magnitudes are greatest. In terms of relay sensitivity, this is the best location for an SLG fault to occur precisely because the quantities are greatest; therefore, the probability of detection is highest. As the fault location is moved deeper into the generator winding toward the neutral, the fault current magnitude decreases, reducing the ability of the protective devices to detect it.

B. Zero-Sequence Current (3I0) Calculation by Symmetrical Components Method

With symmetrical components, SLG faults are calculated by connecting the positive-, negative-, and zero-sequence networks in series, as shown in Fig. 15, and solving for I_0.

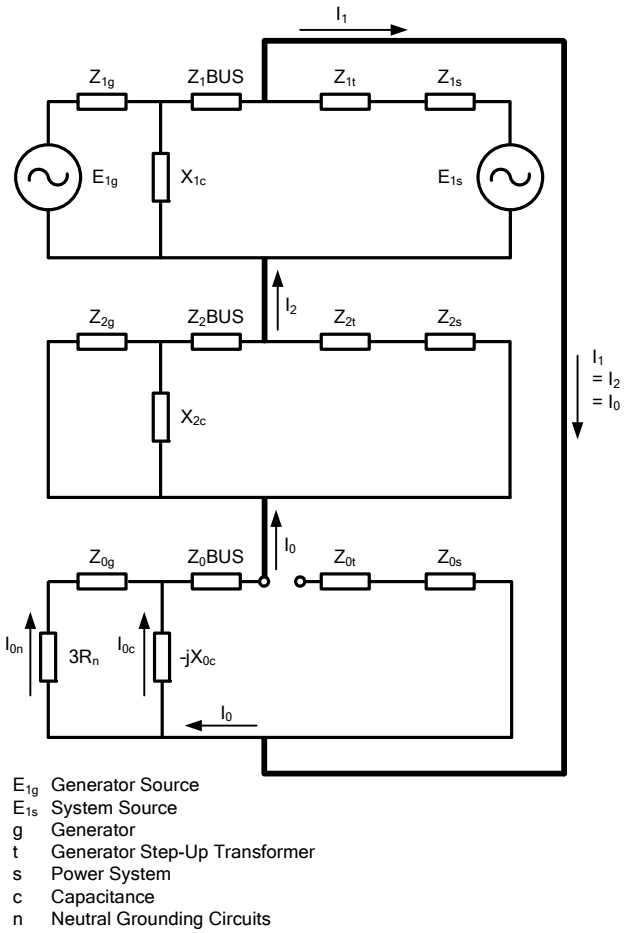

Fig. 15. Symmetrical Component Equivalent Circuit for Calculations of an SLG Fault [1]

The equivalent positive- and negative-sequence impedances of the system and the zero-sequence impedance of the generator can be neglected because they are extremely small compared to the equivalent circuit made up of the neutral resistor and the distributed zero-sequence capacitance. The zero-sequence network is open at the delta winding of the GSU transformer and consists of the reflected generator neutral resistor in parallel with the phase-to-ground capacitance of the generator windings and associated equipment (the generator surge capacitors and arresters and the GSU transformer low-voltage windings). The approximate equivalent circuit is shown in Fig. 14, to which the following definitions apply:

$$I_0 = I_{0n} + I_{0c} \tag{3}$$

where:

I_0 = Total zero-sequence fault current

I_{0n} = Zero-sequence current flowing in the neutral resistor

I_{0c} = Zero-sequence current flowing in the lumped capacitance

Let Z_{0eq} be the equivalent parallel combination of $3R_n$ and $-jX_{0c}$:

$$Z_{0eq} = 0.5(6780 - j6780) = 3390 - j3390\,\Omega \tag{4}$$

The zero-sequence voltage is approximately equal to the generator phase-to-ground voltage:

$$V_0 = 22000/\sqrt{3}\ \text{V} = 12700\ \text{V} \tag{5}$$

Then, I_{0n} can be calculated as follows:

$$I_{0n} = \left(\frac{V_0}{3R_{n(pri)}}\right) = \frac{12700}{3(2260)} = 1.87\,\text{A} \tag{6}$$

Total zero-sequence current is $I_0 = 1.87 + j1.87$ A, because $3R_{n(pri)}$ is equal to X_{0c}, because:

$$\begin{aligned} I_{fault} &= 3I_0 \\ I_{fault} &= 3(1.873 + j1.873)\,\text{A} \\ &= 5.62 + j5.62\,\text{A} \\ &= 7.95\angle 45^\circ\,\text{A} \end{aligned} \tag{7}$$

$3I_{0n}$ is the current flowing in the generator neutral for an SLG fault at the generator terminals. The current I_{sec} flowing in the distribution transformer secondary wiring and through the grounding resistor can be obtained as follows:

$$\begin{aligned} I_{sec} &= 3I_{0n}\left(V_{pri}/V_{sec}\right) \\ &= 5.62\left(\frac{13280}{240}\right) = 311\,\text{A} \end{aligned} \tag{8}$$

The voltage across the secondary resistor is as follows:

$$\begin{aligned} V_R &= I_{sec}R_{n(sec)} \\ &= 311(0.738) = 229.5\,\text{V} \end{aligned} \tag{9}$$

The quantities V_R and I_{sec} are available for setting relays. Remember that the resistance value of the grounding resistor was selected on the basis of the zero-sequence capacitances in the system. The continuous ratings of the resistor and grounding transformer are chosen assuming a full neutral voltage shift (due to an SLG fault at the generator terminals). As shown previously, V_R in this example is 229.5 V. This implies continuous ratings for both resistor and transformer of at least 71.4 kW:

$$\begin{aligned} \text{kW} &= \frac{I_{sec} \bullet V_R}{1000} \\ &= \frac{(229.5)(311)}{1000} = 71.4\ \text{kW} \end{aligned} \tag{10}$$

IX. References

[1] *IEEE Guide for Generator Ground Protection,* IEEE Standard C37.101-2006.

[2] W. A. Elmore, *Protective Relaying Theory and Application*. New York: Marcel Dekker, 2004.

[3] C. H. Griffin and J. W. Pope, "Generator Ground Fault Protection Using Overcurrent, Overvoltage, and Undervoltage Relays," *IEEE Transactions on Power Apparatus and Systems*, vol. PAS-101, issue 12, pp. 4490–4501, Dec. 1982.

[4] J. W. Pope, "A Comparison of 100% Stator Ground Fault Protection Schemes for Generator Stator Windings," *IEEE Transactions on Power Apparatus and Systems*, vol. PAS-103, issue 4, pp. 832–840, Apr. 1984.