Other Protective Considerations

Patrick M. Kerrigan and Joe T. Uchiyama

Abstract—**This part of the tutorial deals with other protective considerations of generators. Topics include the following:**

- **Considerations during gas turbine static starting**
- **Considerations for pump storage applications**
- **Switching near generators**
- **Synchronizing**
- **Synchronous condenser operation**
- **Protection during startup and shutdown**
- **Subsynchronous resonance**

I. Considerations During Gas Turbine Static Starting [1] [2]

Large gas turbines are usually started using the generator as a motor. The generator is run as a synchronous motor supplied by a static frequency converter. The drive operates in a forced commutated mode at very low speeds until the electromagnetic force of the synchronous machine is sufficient to commutate the inverter. Thereafter, it operates in a load-commutated mode. The adjustable speed drive is connected to the generator bus so that generator terminal-side and neutral-side CTs (current transformers) see the same current. The gas turbine may be run for many minutes at different low speeds, while a purging cycle and firing cycle are completed, before it finally accelerates to normal operating speed. V/Hz is maintained constant as speed is increased until the voltage reaches drive-rated voltage, and thereafter voltage is held constant.

When the generator is operating at low frequencies, the normal protection has some limitations. Generally, gas turbines are protected by multifunction protective relay systems. These relays normally track frequency within a specified range. They continue to sample and calculate the currents and voltages at a sampling rate that is a constant multiple of actual frequency. Over the specified frequency range, the various protection functions operate within their specified accuracy limits. Below the frequency tracking range, the sampling rate no longer matches the system frequency, and the accuracy of various elements generally deviates outside of specification.

Manufacturers may supply curves of element performance versus frequency. If a protective function characteristic can falsely operate at low frequencies, it must be disabled below that frequency threshold. In some installations, single function relays with good performance at low frequency have been applied to provide additional protection during start up.

The adjustable speed drive also has protective functions that provide some protection for the generator stator. Typically they include phase overcurrent, phase unbalance, and ground protection. The ground protection is likely to be insensitive if the generator is high-impedance grounded.

One fault that is not detected by either the conventional generator protection or the protection built in to the adjustable speed drive is a fault on the dc bus of the rectifier/inverter. For this fault, a dc current flows though the fault and any ground in the ac system (see Fig. 1). If the generator is grounded through a high-impedance grounded system (a distribution transformer and a secondary grounding resistor) and has wye-connected VTs (voltage transformers), the fault current divides between these two paths (generator ground and VT neutrals to ground). The dc current causes the magnetic elements to saturate, and the fault current flow is limited only by the dc resistances. The generator, the neutral grounding transformer, and the VTs have limited thermal capability to withstand the dc currents flowing through them.

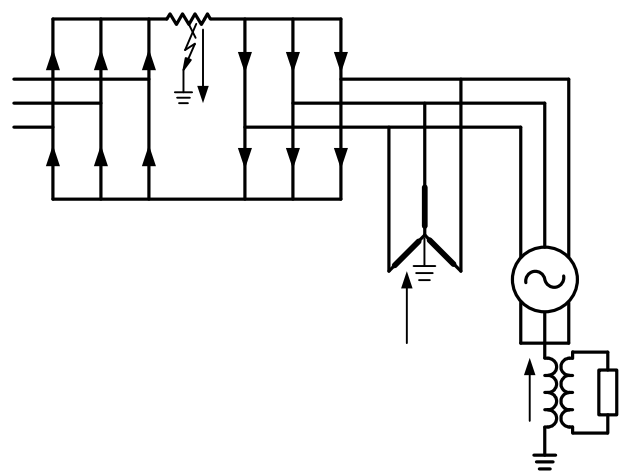

Fig. 1. Fault on DC Link of Static Starter

Many installation designs create a system without any ac grounds during starting. A switch is installed in the generator neutral to remove the neutral ground during starting, and the VTs are connected in delta. This ensures that no dc current flows for a fault in the dc link and that saturation of magnetic elements is avoided. Because the VTs are ungrounded, third-harmonic terminal voltage is unavailable, and 100 percent stator ground fault protection is provided by the neutral third-harmonic undervoltage method.

An alternative approach used in some installations keeps the generator neutral grounded during starting and detects a fault on the dc link by measuring the dc current in the generator neutral. For these faults, the VTs are usually the most limiting components, requiring very quick removal of the fault—as fast as 50 milliseconds, including the time taken

to turn the adjustable speed drive off. On generators grounded through a resistance-loaded distribution transformer, protection schemes have been applied using a resistor/dc transducer between the grounding transformer neutral and ground. The output of the transducer is connected to a sensitive dc relay. Calculations and tests have confirmed the acceptable performance of this protection. The setting is determined by equipment withstand and relay sensitivity. At low speeds, there may not be enough driving voltage to trip the relay.

In some installations, the generator is high-resistance grounded through a resistor connected directly in the generator neutral circuit. For this type of installation, protection against faults in the dc link has been provided in a similar fashion to the previously discussed example by using a dc transducer and a dedicated dc relay.

II. Considerations For Pumped Storage Application

The purpose of a pumped storage hydroelectric installation is to store energy during off-peak periods to be used for generation during peak demand periods. Water is pumped from a lower reservoir to an upper reservoir where it is stored for later use to generate electricity. Most pumped storage units are designed for reversible operation, rotating in one direction as a turbine/generator and in the other direction as a motor/pump. Reversal of direction is accomplished by switching two phases of the main electrical connections using either switches or two breakers, thus changing the phase sequence.

The requirement to reverse rotation introduces the major differences in protection between pumped storage and conventional hydroelectric units. Each protective element must see the appropriate current and voltage transformer connection inputs for proper operation when the phases are reversed.

A. Protection With Discrete Relays [3]

Fig. 2 shows a typical arrangement of single function relays to protect a pumped storage hydroelectric unit in either the generating or pumping mode.

Depending on the location of the CTs and the VTs relative to the reversing switch or breakers, the CT and/or VT connections may also have to be switched to maintain proper connections to the relays in both generating and pumping modes.

For example, in Fig. 2, the generator differential is fed from CTs inside the reversing switch, so the connections to the differential relay do not have to be switched as the mode of operation is changed. However, the CTs for the overall differential are on different sides of the mode-changing switch, so the CT connections have to be switched to maintain proper inputs to the transformer differential relays. For this example, the CT connections to the negative-sequence, loss-of-excitation, and phase distance relays also have to be switched.

Depending on the VT location, the connections to the VTs may also need to be switched. Fig. 2 shows that the VT inputs to the backup distance and loss-of-excitation elements are switched with the mode of operation.

Table I describes the device numbers that are used in Fig. 2, Fig. 3, and Fig. 4.

Table I
Device Number Definitions

Device Number	Relay
21	Mho Phase Distance Unit Backup
24	Overexcitation or V/Hz
26	Locked Rotor Protection
27	Undervoltage
32	Directional Power
37	Underpower
40	Loss-of-Excitation
46	Negative-Phase-Sequence Overcurrent (OC)
47	Phase Sequence Voltage
47G	Phase Sequence for Generator Mode
47M	Phase Sequence for Motor Mode
48	Incomplete Sequence
49	Generator/Motor Thermal
50	Subsynchronous OC Near 10~15 Hz
51/51V	OC Backup
51DP	Damper Pullout OC
59	Overvoltage (OV)
59N/59SN	Stator Ground OV
51N	Generator/Motor Neutral OC
59N/B	Bus Ground OV
60	Voltage Balance
64F	Field Ground
64S	Stator Ground by Injection
78	Phase Measurement/Out-of-Step
81G	Overfrequency
81M	Underfrequency
87G	Generator/Motor Unit Differential
87M	Motor Differential
87T	Main Transformer Differential
87O	Overall 87G/87T Differential

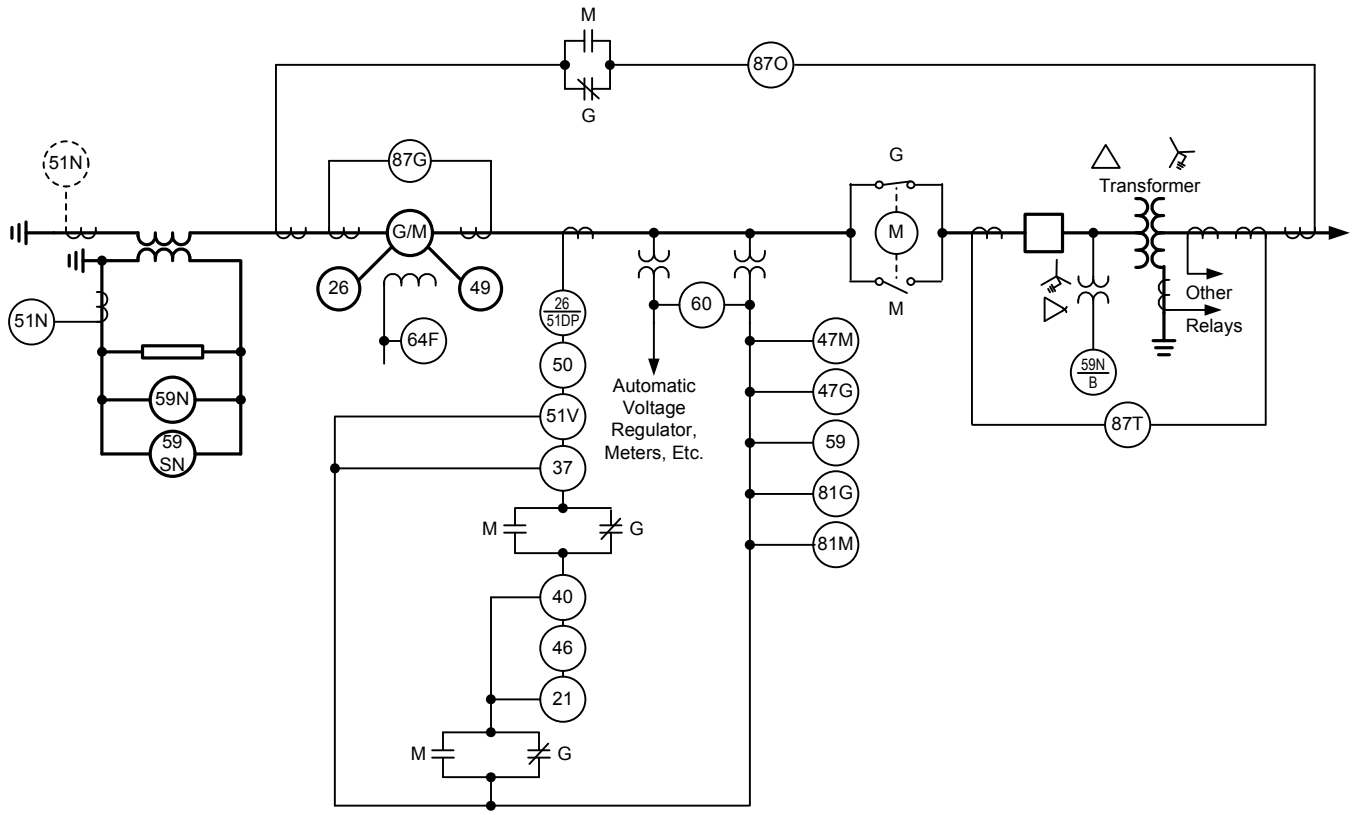

Fig. 2. Typical Protection for Pumped Storage Units Using Discrete Relays

B. Protection With Multifunction Protection Systems

There are two approaches to applying multifunction protection systems to protect pumped storage units. The first method uses two sets of relays, one for the generating mode and the other for the pumping mode, each wired for the appropriate phase connections. The second method uses one relay for both modes. The following describes each of these two methods:

1. Fig. 3 illustrates this approach with System 11G protecting the unit for generating mode and System 11M protecting the unit for the motoring mode. Note that in this example, some of the protective functions in each multifunction relay are used in both motor and generator modes. The 40 element is one example. It is only enabled in System 11G but active in both generator and motor modes.
2. Fig. 4 shows that an input is provided to the relay to change from one settings group to another, depending on the mode of operation. Relays applied for this application typically do not need to have the CT or VT connections externally switched as the mode is changed. Instead, they use internal logic to ensure that the appropriate currents and voltages are used by each element.

In addition to eliminating the need for switching CT and/or PT connections as the mode of operation changes, multi-function protection systems have these additional advantages:

- They occupy less panel space compared with the many single-function relays needed to provide equivalent protection.
- They can be economically duplicated for reliability and to facilitate in-service testing.
- They require less wiring and are easier to set up for testing.
- They provide self-diagnostics, sequence of event records, and wave captures for post-fault analysis.

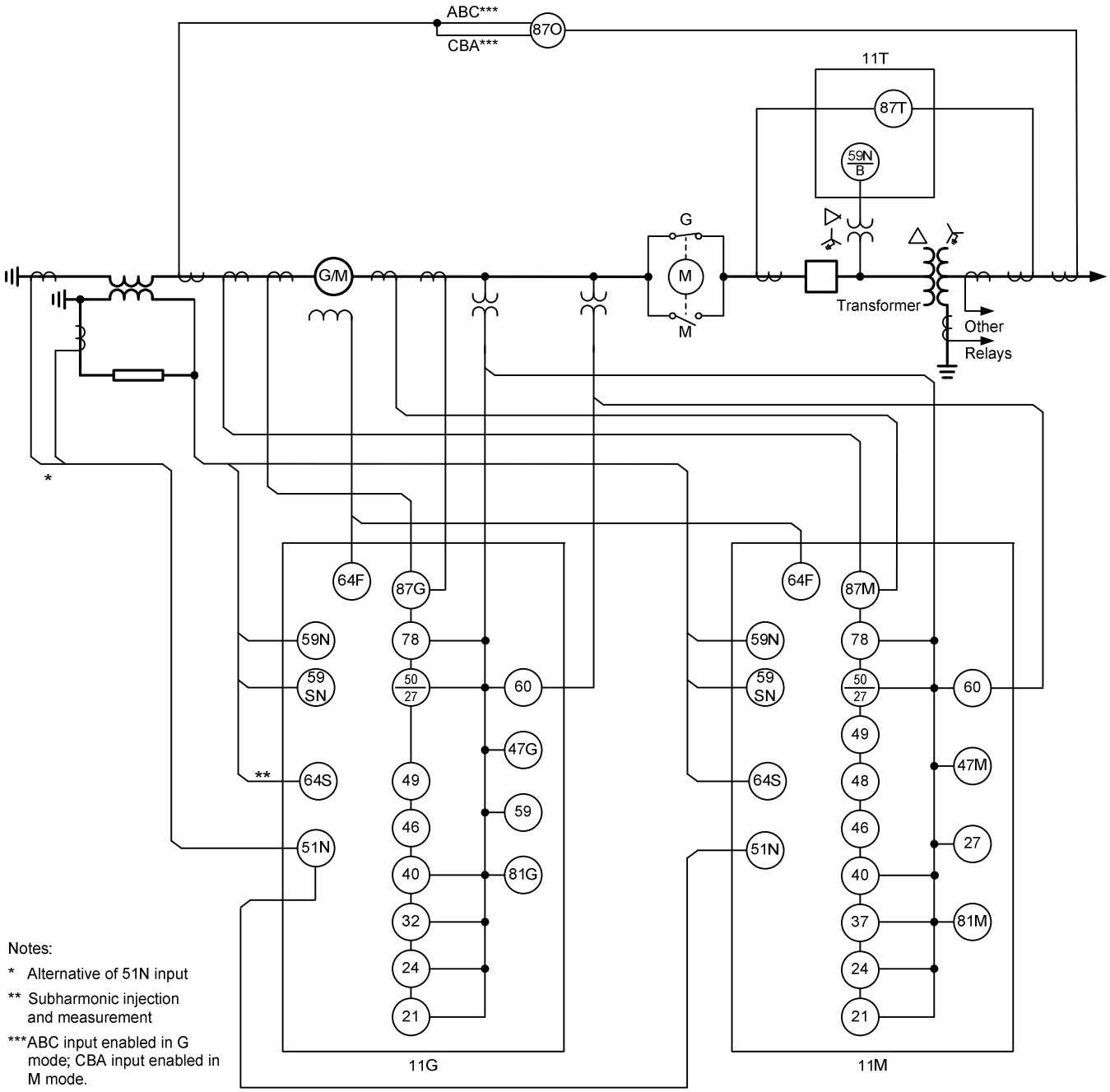

Fig. 3. Typical Protection for Pumped Storage Units Using Two Multifunction Relays

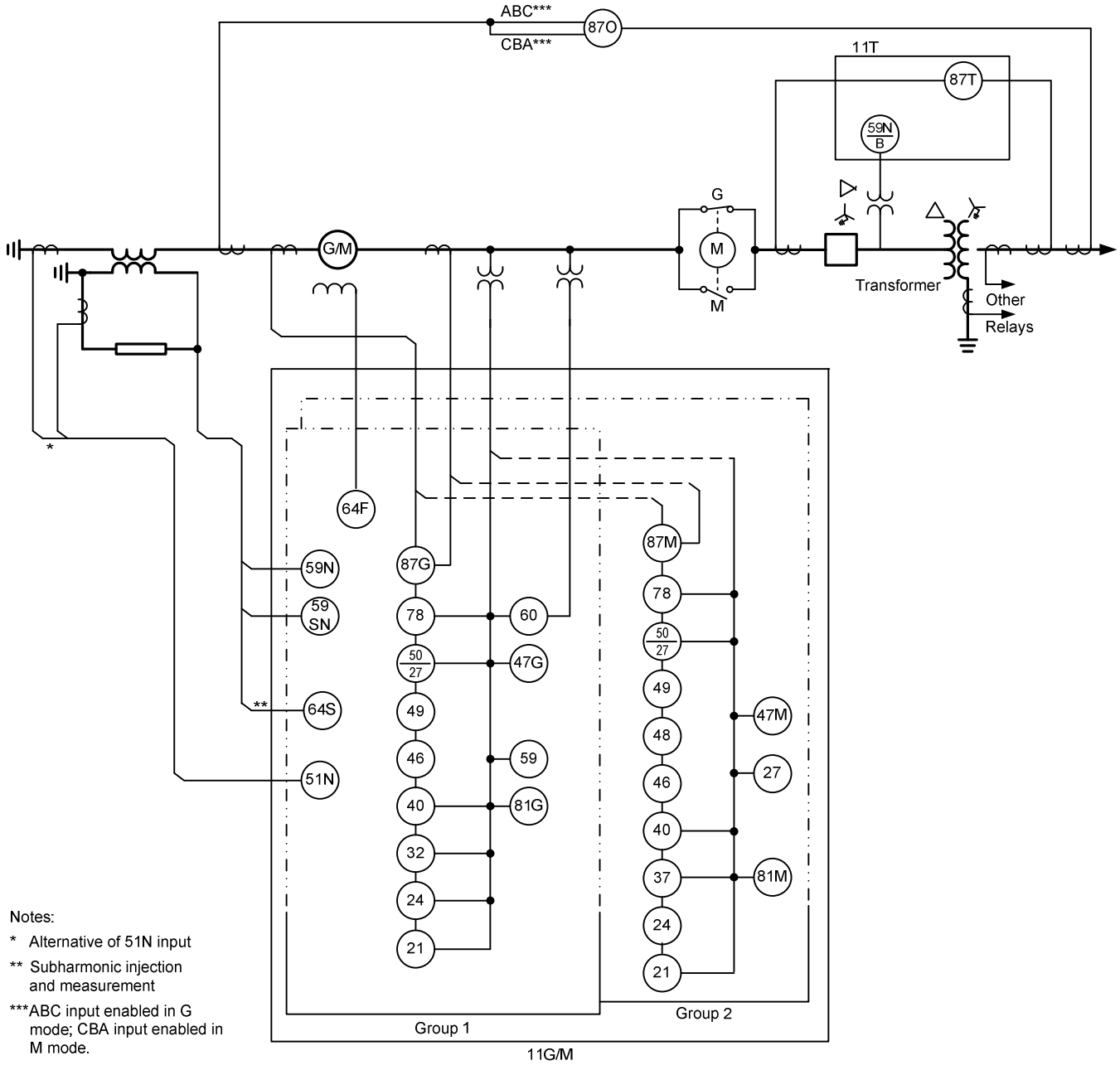

Fig. 4. Typical Protection for Pumped Storage Units Using Two Group Settings on One Multifunction Relay

III. Switching Near Generators [1]

Switching operations involving the opening and closing of circuit breakers at or near a generating station may produce transient power and current oscillations that may stress or damage turbine generators. Of particular concern are the switching operations that produce torsional oscillations and shaft torques that may cause major shaft fatigue damage in one or relatively few incidents of severe switching disturbances.

The switching disturbances of primary concern are steady-state switching of lines and high-speed reclosing of circuit breakers following transmission line faults. These issues are discussed next.

A. Steady-State Switching of Lines

The switching of lines near a generating station for maintenance purposes may produce a step change in power that will result in transient mechanical forces on both the rotating and stationary components of a turbine generator. This sudden change in power is a function of the system impedance and the switching angle across the open circuit breaker. Studies have shown that if the instantaneous change in power, ΔP, during steady-state switching operations does not exceed 0.5 pu, the duty (loss of life) on the turbine generator will be negligible. If this power change exceeds 0.5 pu, the turbine generator manufacturer should be consulted to determine if there is potential turbine generator damage.

B. High-Speed Reclosing of Circuit Breakers Following Transmission Line Faults

High-speed reclosing of transmission lines at or near a generating station following a fault has the potential to cause major shaft fatigue damage to a turbine generator. Of particular concern is the possibility of an unsuccessful reclosure into a persistent fault that may reinforce the torsional oscillations and shaft torques caused by the original disturbance, possibly causing a significant loss in fatigue life of turbine generator shafts.

Reclosing practices can minimize the potential detrimental effects of high-speed reclosing of transmission lines near generating stations. When applying reclosing practices, the engineer should consider the following:

- Delayed reclosing for all faults. A delay of 10 seconds or longer is suggested.
- Sequential reclosing. Reclose initially from the remote line end, and block reclosing at the generating station if the fault persists. This approach is only applicable if the remote line end is not electrically near turbine generator units. Reclosing from the remote end on long lines may cause transient overvoltages if the other end of the line is a weak source.
- Selective high-speed reclosing. The type of reclosing used (high-speed or delayed) depends on the type or severity of fault.
- Single-phase tripping and reclosing. Trip only the faulted phase, and delay reclosing until after secondary fault arc extinction. This practice provides an advantage that the remaining connected phases tend to hold the machine in synchronism during the first clearing attempt, minimizing power swings and helping to maintain stability.

IV. Synchronizing [1]

Improper synchronizing of a generator to a system may result in damage to the generator step-up (GSU) transformer and any generating unit. The damage incurred may be slipped couplings, increased shaft vibration, a change in bearing alignment, loosened stator windings, loosened stator laminations, and fatigue damage to shafts and other mechanical parts. The windings and insulation blocking of the connected GSU transformer can also be damaged because of the high current that can flow during a faulty synchronization.

To avoid damaging a generating unit during synchronizing, the generator manufacturer will generally provide synchronizing limits in terms of breaker closing angle and voltage matching. Typical limits are:

- Breaker closing angle within ±10 electrical degrees. The closing of the circuit breaker should ideally take place when the generator and the grid are at zero degrees phase angle with respect to each other. To accomplish this, the breaker should be closed in advance of phase angle coincidence to accommodate for the breaker closing time. This is mathematically expressed as:

$$\theta = 360\, F_S T_S \qquad (1)$$

where:

θ is the advance angle in degrees.

F_S is the slip frequency in Hz.

T_S is the breaker closing time in seconds.

- Voltage matching 0 to +5 percent. This limit aids in maintaining system stability by ensuring some VAR flow into the system. Additionally, if the generator voltage is excessively lower than the grid when the breaker is closed, sensitively set reverse power relays may trip.
- Frequency difference less than 0.067 Hz. The frequency difference should be minimized to the practical control/response limitations of the given prime mover. A large frequency difference causes rapid load pickup or excessive motoring of the machine. This manifests itself both as power swings on the system and mechanical torques on the machine. Additionally, if the machine is motored, sensitively set reverse power relays may trip.

Slip frequency limits applied for certain machine types are based on the ruggedness of the turbine generator, the controllability of the turbine generator, and generator capacity (MVA).

Several synchronizing approaches may be used to minimize the possibility of damaging a generator, such as automatic, semiautomatic, and manual synchronizing.

A. Automatic Synchronizing System

Complete automatic synchronizing includes an integrated combination of elements that monitor voltage magnitude, phase angle, and rate of change of the phase angle across a controlled circuit breaker. It takes into account the closing time of the controlled breaker to predict when to initiate closing. This system includes an automatic synchronizer and elements (relays or modules) to monitor and control the frequency and voltage of the generator.

The synchronizing relay measures the speed of the generator relative to the system and the phase angle between the generator and the system. The relay then gives a closing impulse to the breaker at the correct angle in advance of synchronism to ensure that the breaker poles will close when the machine and system are in phase. For a given breaker closing time, the closing impulse will be given at the correct angle in advance of synchronism provided that the frequency difference is within a set limit. In general, there should be a small difference in frequency between the generator and the system for the synchronizing relays to operate.

The speed-matching relay is used to automatically match a generator frequency to a system frequency. The relay produces impulses that may be used to raise or lower generator speed. In general, generator speed is adjusted to be slightly higher than system frequency for synchronizing

purposes to prevent motoring or tripping on reverse power. Synchronism-check relays are often applied with automatic synchronizers to supervise the automatic control function.

In some instances, the speed-matching and voltage-matching functions are provided with the automatic control systems supplied with the generator.

B. Manual and Semiautomatic Synchronizing Systems

The manual synchronizing system relies on the operator's judgment for breaker closure while controlling generator voltage and frequency. The information required for the operator to make a closing decision is provided by a group of instruments. The operator's action may be supervised by additional devices but are transparent to the operator. These devices act as permissive only and do not match speed and voltage or initiate closure.

The semiautomatic synchronizing system has aspects of both the manual and automatic systems in that the operator has supervision of the automatic device and may directly control the generator speed and voltage.

The relay used to perform the supervisory function is a synchronism-check relay. Depending on the sophistication of the applied relay, it may be of the phase angle/time and voltage variety or phase angle/slip relationship and voltage variety. The setting of the synchronism-check relay should be set to the maximum angle expected at the maximum slip frequency allowed. In general, with this type of relay, the angular difference for synchronizing can be limited to 10 degrees or less. High-speed synchronism-check relays should be used for this supervisory role for either the automatic or manual synchronizing applications because of the quick, repeatable response on rotating phase angle applications.

V. Synchronous Condenser Operation [1]

A synchronous condenser is used to supply or absorb reactive power. The system supplies power to keep the machine rotating synchronously. The same protective devices and application principles can be applied as would be used on a generator, except that reverse power relays cannot be applied because the machine is importing power from the system.

Some machines, especially hydroelectric generators, may be operated in synchronous condenser mode with zero or small exported power. It is possible (without service of under-exciter limiter) for the loss-of-field relaying schemes to operate unnecessarily when the generator is underexcited (i.e., taking in reactive power approaching machine rating). To prevent unnecessary operations, an undervoltage relay may be used to supervise the loss-of-excitation scheme. The dropout level of this undervoltage relay would be set at 90 to 95 percent of rated voltage, and the relay would be connected to block tripping when it is picked up and would permit tripping when it drops out. This combination provides protection for almost all loss-of-field conditions but may not trip when the generator is operating at light load, because the voltage reduction may not be sufficient to cause relay dropout.

VI. Protection During Startup and Shutdown [1]

During startup or shutdown of a generator, and in particular cross-compound units, the unit may be operated at reduced and/or decreasing frequency with the excitation (field) applied for a period of time. When operating below the rated frequency, the sensitivity of some of the generator zone protective relays may be adversely affected. The sensitivity of a few relays will only be slightly reduced while other relays will not provide adequate protection or become inoperative. Fig. 5 shows the effects of frequency on the pickup of electromechanical relays that may be used in the generator zone. Note that some relays lose sensitivity rapidly below 60 Hz. Induction disk current relays may provide adequate protection down to 20 Hz, while plunger-type voltage relays are not adversely affected by off-frequency operation.

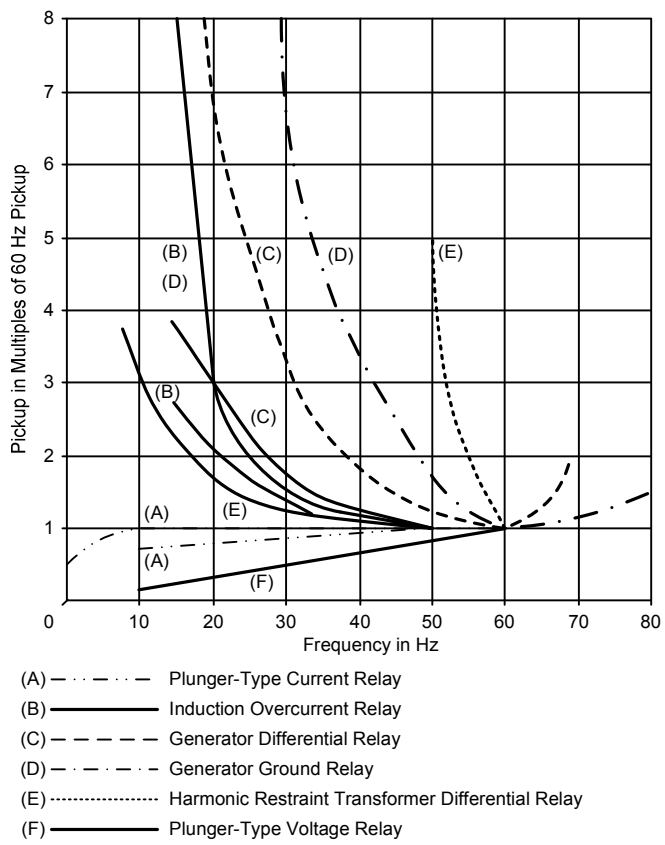

Fig. 5. Example of Relay Pickup With Frequency

Supplementary protection during startup or shutdown of a unit-connected generator and its associated transformer may be provided through the use of protective relays whose pickup is not adversely affected by frequency, such as instantaneous overcurrent (IOC) or plunger-type voltage relays. Supplementary protection using plunger-type voltage relays should be placed in service only when the generator is disconnected from the system, as these relays are not suitable for continuous operation in the picked-up state.

Supplementary ground fault protection may be provided by using a plunger-type voltage relay connected in parallel with the normal ground overvoltage protection.

Solid-state relays and digital protection systems have various frequency response characteristics. The specific effect of off-frequency operation should be checked with the manufacturer. No supplemental protection may be needed if the relays perform adequately at low frequencies.

VII. Subsynchronous Resonance (SSR) [1]

When a generator is connected to a transmission system that has series capacitor compensation, it is possible to develop subsynchronous frequency oscillations and shaft torques that can be damaging to the generators. When a generator will be operating on such a series-compensated system, the user should work closely with the generator manufacturer to ascertain the severity of the problem and define the requirements for equipment to protect the generator on a particular system. The successful mitigation of the oscillations may be accomplished by equipment selection and control and protection techniques.

A. Equipment Selection

Determination of the proper amount of series compensation to avoid SSR requires extensive studies.

B. Control

Several control techniques may dampen oscillations before a trip is necessary, for example:

- The application of supplementary control in the excitation system to provide damping torque.
- Subsynchronous blocking filters to limit subsynchronous currents.
- Series capacitor bypass switches that close upon detection of SSR.
- Torsional dynamic stabilizers.

C. Protection

Protective devices may be applied to remove a generator from the system as the primary protection against SSR or as a backup to other SSR mitigation. A torsional relay may be set to trip for both low-level oscillatory torques that are growing in magnitude and for very high-level torques occurring between different sections of the shaft. Relay inputs could include instantaneous shaft-speed deviation or instantaneous generator power. A torsional protection relay may also be set to trip when oscillations persist.

Monitoring systems can be applied to turbine generators to record SSR events and provide information on shaft loss-of-life. One type of monitoring scheme calculates shaft torques from measurements of generator voltages and currents. Another alternative is to monitor actual shaft torques. Monitoring equipment enables post-event analysis that may be helpful in evaluating the performance of SSR mitigation and protection systems.

VIII. References

[1] *IEEE Guide for AC Generator Protection*, IEEE Standard C37.102-2006.

[2] M. Reichard, Z. Bukhala, T. Beckwith, E. Fennell, D. Finney, D. Fredrickson, J. Gardell, W. Hartmann, P. Kerrigan, P. Kumar, D. Lukach, C. Mozina, S. Patel, and J. Uchiyama, "Protection Considerations for Combustion Gas Turbine Static Starting," IEEE PSRC Working Group J2 Report to J Subcommittee, 2009.

[3] N. O. Engebretson, J. R. Boyle, H. L. Goodridge, C. H. Griffin, S. H. Horowitz, R. A. Larkin, R. E. Linton, G. D. Paradis, A. C. Pierce, B. M. Rice, W. R. Roemish, W. H. VanZee, C. L. Wagner, and S. V. Watson, "Protective Relaying for Pumped Storage Hydro Units Rotating Machinery Protection Subcommittee of the IEEE Power System Relaying Committee," *IEEE Transactions on Power Apparatus and Systems*, vol. 94, issue 3, pp. 899–907, May 1975.