Underexcitation/Loss-of-Excitation Protection

Murty V. V. S. Yalla and Juan Gers

***Abstract*—Partial or total loss of field on a synchronous generator is detrimental to both the generator and the power system to which it is connected. This condition should be detected and the generator isolated from the system to avoid generator damage. An undetected loss-of-field condition can also have a devastating impact on the power system. The impact causes a loss of reactive power support and creates substantial reactive power drain. On large generators, this condition can contribute to or trigger an area-wide, system-voltage collapse. This section of the tutorial discusses the generator loss-of-field characteristics and schemes to protect the generator from loss-of-field conditions.**

I. Introduction

A synchronous generator requires adequate dc voltage and current to its field winding to maintain synchronism with a power system. There are many types of exciters that are used in the industry, including rotating dc exciters with conventional commutators, rotating brushless rectifier sets, and static exciters.

The generator capability curve shown in Fig. 1 provides an overview of synchronous machine operations. Normally, the generator field is adjusted so that the required reactive power as well as the real power is delivered to the power system. If the excitation level is reduced or the excitation system is lost, the generator absorbs reactive power from the power system rather than supplying it. The generator now operates in the underexcited region of the capability curve. Generators have low or reduced stability in this area. If a total loss of field occurs and the system can supply sufficient reactive power without a large terminal voltage drop, the generator may run as an induction generator. The change from normal overexcited operation to underexcited operation upon loss of field is not instantaneous but occurs over a period of time that extends over several seconds. The duration depends on the generator output level and the capability of the system to which the generator is connected.

The generator capability curve in Fig. 1 outlines the operating generator limits. In the normal operating region, the limiting factors are the thermal limits of the rotor and stator. In the underexcited area, the limiting factor is the heating of the stator end iron. The setting of the exciter-regulator control is coordinated with the steady-state stability limit (SSSL) of the generator. This limit is a function of the generator impedance, system impedance, and generator terminal voltage. Reference [1] provides details on how to plot this curve. The generator underexcited limiter control should prevent the exciter from reducing the field below the SSSL. Partial or full loss of field can result in the generator operating outside of the underexcited limits.

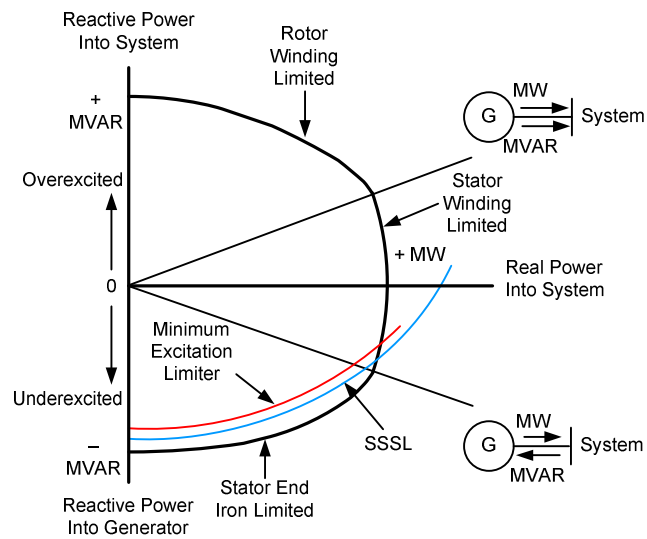

Fig. 1. Generator Capability Curve

Complete loss of excitation occurs when the direct current source connected to the generator field is interrupted. Loss of excitation can be caused by such incidents as field open circuit, field short circuit (flashover across the slip rings), accidental tripping of the field breaker, voltage regulator control system failure, loss of field to the main exciter, and loss of an ac supply to the excitation system.

When a synchronous generator loses its excitation, it runs at higher than synchronous speed and operates as an induction generator delivering real power (MW) to the system. At the same time, the generator obtains its excitation from the system in the form of vars and becomes a large reactive drain on the system. This large reactive drain causes problems for the generator, adjacent machines, and the power system. The system impact of loss of field to a generator depends on the stiffness of the connected system, load on the generator prior to the loss of field, and the size of the generator.

II. Generator Damage

When a combustion gas or steam turbine generator experiences a loss of field, it operates as an induction generator causing the temperature of the rotor surface to increase because of eddy currents in the field winding, rotor body, wedges, and retaining rings. Dangerous overheating may occur, particularly at the ends of the rotor where currents flow across the slots through the wedges and the retaining rings. The high reactive current drawn by the generator from the system can overload the stator winding, causing the stator temperature to increase. Machine damage can occur in as few as 10 seconds to several minutes. The time depends on the

machine, type of excitation loss, governor characteristics, and generator load.

Because of saliency, a hydroelectric generator may carry 20 to 25 percent of normal load without a field and maintain synchronism. The actual load carrying capability is a function of machine and system characteristics. Also, operation with nearly zero field and at reduced load is often necessary to accept line charging current. However, if a loss of field occurs when a hydroelectric generator is carrying full load, it will behave and produce the same effects as a steam turbine driven generator. High stator and induced field currents may damage the stator winding, the field windings, and/or the amortisseur windings while the unit causes a var drain on the system.

III. System Effects of a Loss-of-Field Condition

A loss-of-field condition that is not detected quickly can have a devastating impact on the power system by causing a loss of reactive support and creating a substantial reactive power drain for a single event. This condition can trigger an area-wide voltage collapse if a sufficient source of reactive power is not available to meet the demand for vars created by the loss-of-field condition. If the generator that has sustained a loss of field is not isolated, transmission lines can trip because of power swings or excessive reactive power flow to the faulty generator.

IV. Generator Loss-of-Field Characteristics

When a generator loses its excitation while operating at various levels of loading, the variation of impedance as viewed at the machine terminals will have the characteristics shown on the R-X diagram in Fig. 2.

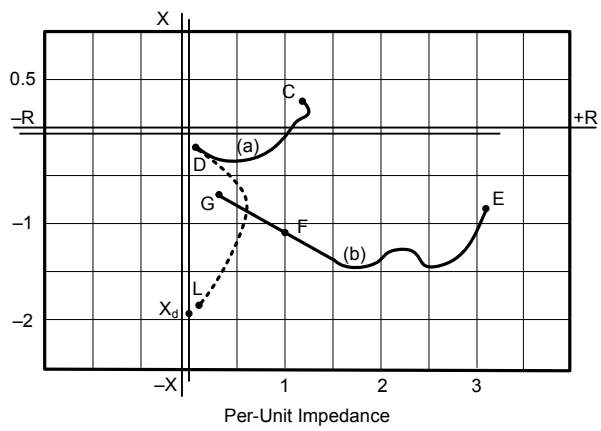

Fig. 2. Loss-of-Field Characteristic of a Generator

Curve (a) shows the impedance variation with the machine operating initially at or near full load. The initial load point is at C, and the impedance locus follows the path from C to D. The impedance locus terminates at D to the right of the (–*x*) ordinate and approaches impedance values somewhat higher than the average of the direct and quadrature-axis subtransient generator impedances.

Curve (b) illustrates a machine that initially operates at 30 percent load and underexcited. In this case, the impedance locus follows the path from E to F to G and oscillates in the region between F and G. For a loss of field at no load, the impedance as viewed from the machine terminals varies between the direct and quadrature-axis synchronous reactances (X_d, X_q). Generally for any machine loading, the impedance viewed from the machine terminals terminates on or varies about the dashed curve from D to L.

The impedance trajectory locus depends on the value of system impedance. Machines connected with system impedances approximately less than 20 percent take a direct path to the final point, and with higher system impedances, the trajectory spirals into the final point. The spiral path is faster than the direct path.

If the machine is fully loaded prior to the loss-of-excitation condition, the machine at the final impedance point will operate as an induction generator, with a slip of 2 to 5 percent above normal. The machine will also start receiving reactive power from the system while supplying reduced real power. High system impedance results in low power output and high slip.

V. Protection

The loss-of-field protective relay should reliably detect the loss-of-excitation condition without responding to load swings, system faults, and other transients that do not cause machine instability. Presently available loss-of-excitation relays provide reliable protection. The potential for misoperation of these relays from system disturbances is low when properly set.

A. Protection Schemes Based on Field Current

Protection schemes based on the measurement of machine field current with overcurrent and undercurrent relays can detect generator loss of excitation. However, this scheme is not reliable during all system conditions. Measurement of reactive current through the generator (or reactive power) has also been used to detect loss-of-excitation conditions. This scheme provides good loss-of-field protection and has low cost, but it does not differentiate well between a loss-of-field and other system fault conditions. These schemes are typically applied on small generators.

B. Negative Offset Mho Element Protection Schemes

The most popular and reliable protection scheme for loss-of-field detection uses an offset mho relay. Fig. 3 shows the operating characteristic of a single zone offset mho relay.

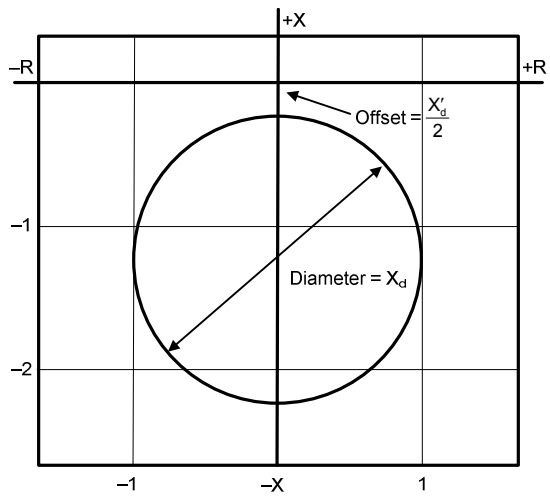

Fig. 3. Single Zone Offset Mho Relay Characteristic

Connected at the machine terminals and supplied with terminal voltages and currents, this relay measures the impedance as viewed from the machine terminals and operates when the impedance falls inside the circular characteristic.

The relay is offset from the origin by one-half of the direct axis transient reactance $X'_d/2$ to prevent misoperation during system disturbances and other fault conditions. The diameter of the circle is adjusted to equal the direct axis synchronous reactance. A time delay of 0.5 to 0.6 seconds provides security against stable power swings. These settings can provide loss-of-excitation protection of the generator from no load to full load provided that the generator direct axis synchronous reactance ranges from 1.0 to 1.2 pu.

Note that the minimum excitation limiter (MEL) and the loss-of-field characteristic should be coordinated so that their characteristics do not overlap (see Fig. 4). The MEL prevents leading var excursions into the loss-of-field characteristic to avoid relay misoperation for system transients.

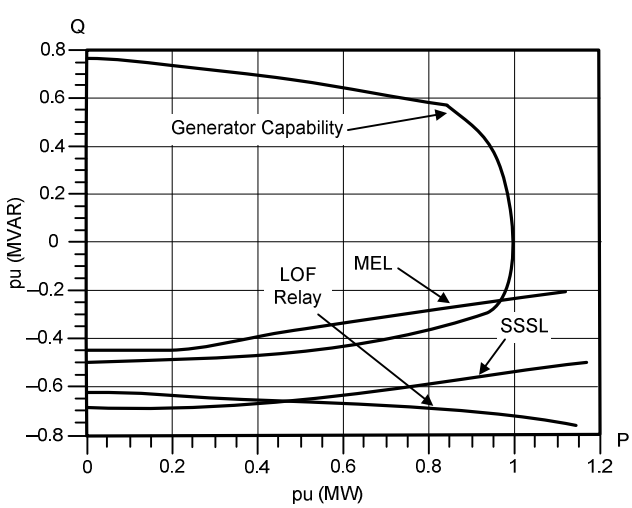

Fig. 4. Coordination of Loss-of-Field (LOF) Relay with MEL

Modern machines that are designed with higher synchronous reactance range from 1.5 to 2.0 pu. With these high synchronous reactances, setting the diameter of the offset mho relay to X_d opens up the possibility of relay misoperation during underexcited operation and stable power swings. To prevent these misoperations, the circle diameter is limited to 1.0 pu (on the generator base) instead of X_d. This reduced setting limits the protection coverage to heavily loaded machine conditions and does not provide protection for light load conditions.

To circumvent this limitation, two offset mho relays can be used, as shown in Fig. 5. The relay with 1.0 pu (on the generator base) impedance diameter detects a loss-of-field condition from full load to about 30 percent load. The relay is set with a short time delay (0.1 second delay is suggested for security against misoperation during transients) to provide fast protection for severe conditions in terms of possible machine damage and adverse effects on the system. The second relay, with a diameter equal to X_d and a time delay of 0.5 to 0.6 seconds, provides protection for a loss-of-excitation condition up to no load. The two offset mho relays provide loss-of-excitation protection for any loading level. Both relays are set with an offset of $X'_d/2$. Fig. 5 depicts this approach. Experience has shown that these Zone 1 and Zone 2 settings are secure from stable swing encroachments over a wide range of system conditions. However, transient stability analysis should be performed to verify this.

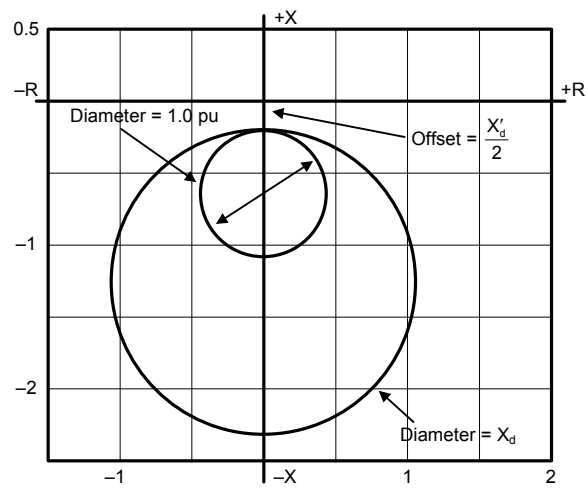

Fig. 5. Two Zone Offset Mho Relay Characteristic

C. Positive Offset Mho Element Protection Schemes

Examination of Fig. 4 shows that the negative offset mho element characteristic leaves an underprotected area relative to the SSSL and the stator end iron limit curve of the machine capability. To improve coverage for underexcited operation, the scheme illustrated in Fig. 6 can be used. This scheme uses a combination of a positive offset mho relay, a directional relay, and an undervoltage relay applied at the generator terminals and set to look into the machine. The directional unit supervises the mho unit because the positive offset will allow it to operate for faults external to the terminals of the generator.

The mho unit (shown as Z2 on Fig. 6) is set to coordinate with the generator minimum excitation limiter (MEL), the generator underexcited capability curve, and the SSSL. The Z2 positive offset, X_S, is the impedance of the system beyond the machine terminals. A conservative approach calculates the system equivalent impedance under an N-1 condition. The diameter of the SSSL circle is given by $X_S + X_d$, so the recommended setting of 1.1 for reach into the machine shown in Fig. 6 provides a margin from the SSSL.

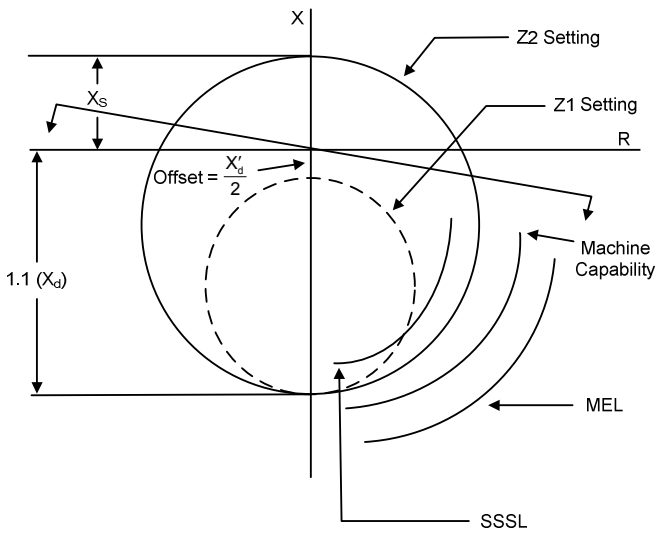

Fig. 6. Loss-of-Field Protection Using Impedance Relay and Directional Element

A well-coordinated scheme is illustrated in Fig. 6. The MEL is set outside the machine capability curve to prevent operation in the stator end iron damage region of the machine capability curve, as well as the SSSL, to reduce the possibility of going out of step. The loss-of-field characteristic is set between the machine capability curve and the SSSL. In weaker systems with high transfer impedance, the SSSL may encroach on the machine capability curve. An example of this is shown in Fig. 1. In that case, the loss-of-field characteristic should be set outside the machine capability curve (inside on the PQ diagram) between the SSSL and the MEL.

During abnormally low excitation conditions, such as might occur following a failure of the MEL, these relays operate and provide an alarm, allowing a station operator to correct the condition. When a low-voltage condition also exists, indicating a loss-of-field condition, the undervoltage relay operates and initiates tripping with a time delay of 0.25 to 1.0 seconds. The shorter time is used if there is no Zone 1 element.

Two relays may also be used in this scheme, with the second (shown as Z1 in Fig. 6) set with an offset equal to $X'_d/2$ and with the long-reach intercept equal to 1.1 times X_d. In this case, the relay with the Z1 setting trips with a time delay of 0.2 to 0.3 seconds to ride through stable swings and system transients. It is advisable to conduct system studies to determine the time delay.

D. Hydroelectric Application Considerations

When applying this protection to hydroelectric generators, other factors may have to be considered. Because hydroelectric generators may operate occasionally as synchronous condensers, it is possible for the previously described loss-of-field relaying schemes to operate unnecessarily when the generator is underexcited, that is, taking in vars approaching machine rating. To prevent unnecessary operations, an undervoltage relay is used to supervise the distance relaying schemes. The dropout level of this undervoltage relay is set at 90 to 95 percent of rated voltage, and the relay is connected to block tripping when picked up and permit tripping when dropped out. This combination provides protection for almost all loss-of-field conditions but may not trip when the generator is operating at light load because the voltage reduction may not be sufficient to cause relay drop out.

A system stability study may be required to evaluate the generator and system response to power system faults. The response of the loss-of-field relays under these conditions must be studied to see if they respond to power swing conditions as a result of system faults. The transmission owner, generator owner, and planning coordinator must share information on these studies and loss-of-field relay settings to prevent inadvertent tripping of generators for external fault conditions not related to a loss-of-field condition.

VI. Tripping Mode

The loss-of-field protection is normally connected to trip the main generator breaker(s), the field breaker and transfer unit auxiliaries. The field breaker is tripped to minimize rotor field damage when a loss of field is caused by a rotor field short circuit or a slip ring flashover. With this approach, if the loss of field was caused by an easily remedied condition, a tandem compound generator could be quickly resynchronized to the system. This approach may not be applicable with once-through boilers, cross-compound units, or those units that cannot transfer sufficient auxiliary loads to maintain the boiler and fuel systems. In these cases, the turbine stop valves are also tripped.

VII. Reference

[1] *IEEE Guide for AC Generator Protection*, IEEE Standard C37.102-2006.