Multifunction Generator Protection Systems

Murty V. V. S. Yalla

I. Introduction

Generator protective relaying technology has evolved from discrete electromechanical and static relays to digital multifunction protection systems. Many protection schemes in service today use discrete electromechanical or static relay types that have a long history of providing reliable protection and continue to be applied in many applications. However, with the availability, additional performance, economic advantages, and reliability of digital multifunction protection systems, this advanced technology is incorporated into most new protection schemes. In most cases, new generators are protected with either dual multifunction generator protection systems (MGPSs) or a single MGPS, possibly backed up by single-function relays. Some modern excitation systems contain protection functions that may be considered as backup.

Digital technology offers several additional features that could not be obtained in one package with earlier technology. These features include: metering of voltages, currents, power, and other measurements; oscillography; sequence-of-events capture with time tagging; remote setting and monitoring through communications; user configurability of tripping schemes and other control logic; reduced panel space and wiring; low burden on the VTs (voltage transformers) and CTs (current transformers); continuous self-checking and ease of testing.

Fig. 1 shows the block diagram of a typical MGPS. The general multifunction relay application is made up of two or more functions implemented on a single hardware platform. The MGPS has analog inputs (voltage and current signals), digital inputs for receiving contact status and other indications, and digital outputs for sending trip and alarm signals. The MGPS will also have bidirectional communications ports that may be EIA-232, EIA-485, fiber-optic, Ethernet, or some other hardware interface for external communication. Internal hardware consists of an analog data acquisition system that includes signal scaling, isolation, filtering (anti-aliasing), sample-and-hold, analog multiplexing, and analog-to-digital conversion. The digital subsystem consists of a microprocessor, ROM (read-only memory) for program storage, RAM (random-access memory) for temporary storage of information, and EEPROM (electrically erasable programmable memory) for storage of set points.

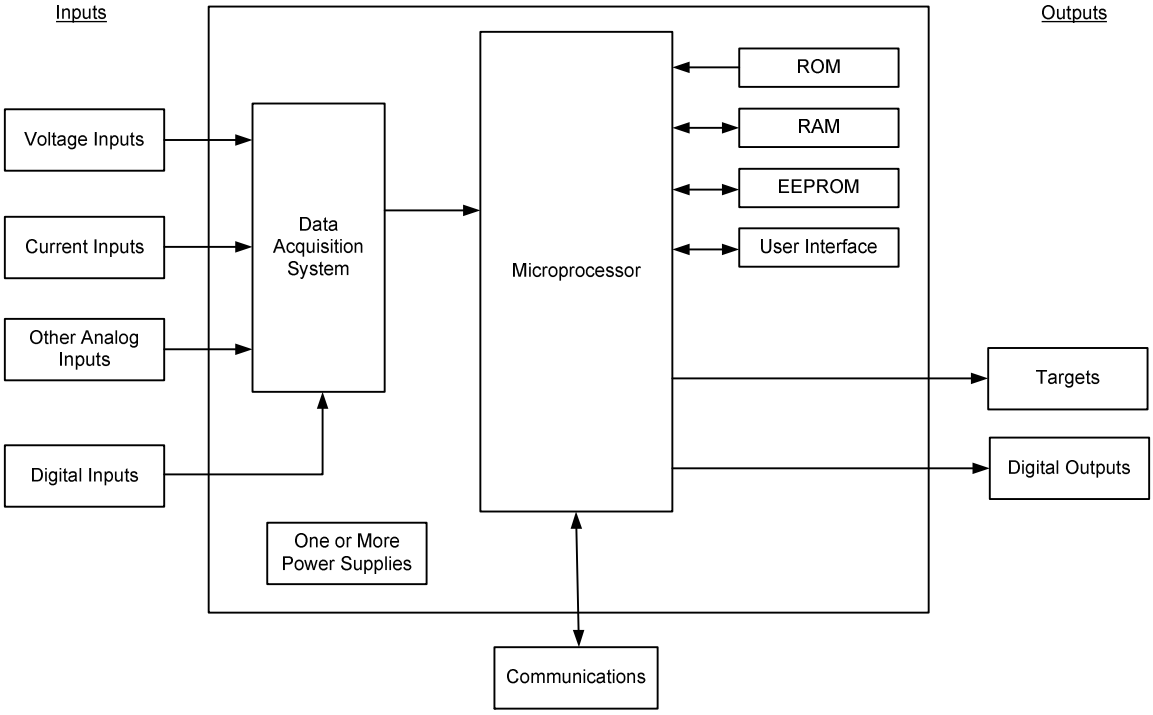

Fig. 1. Block Diagram of a Typical MGPS

The functional operation and performance of the MGPS are determined by both hardware and software programs. Digital signal-processing algorithms filter the voltage and current input signals and calculate the parameters (magnitudes and phase angles or phasors) required for the relaying functions. The relay logic software program compares the set points to the calculated parameters and implements the required time-delay characteristics. The software program also implements other features such as communication, oscillography, event record, and local-user interface.

II. Application on a Typical Generating Unit

A. Protection Functions

Protection functions traditionally provided by individual component relays and now integrated into MGPS packages include two or more of the following:

- Generator phase differential (87G)
- Generator ground differential (87GN)
- GSU (generator step-up) transformer differential (87T)
- Stator ground (59G)
- 100 percent stator ground
  - Third-harmonic neutral undervoltage (27TH)
  - Third-harmonic voltage ratio or differential (59THD)
  - Subharmonic voltage injection (64S)
- Current unbalance/negative sequence (46)
- Loss of excitation (40)
- Overexcitation (24)
- Undervoltage (27)
- Overvoltage (59)
- Underfrequency (81U)
- Overfrequency (81O)
- Reverse power or directional power (32)
- Stator thermal (49)
- Overcurrent (51)
- System backup (51VC/51VR) or (21)
- Loss of voltage (60)
- Out of step (78)
- Field ground (64F)

Additional functions that may be provided include: sequential trip logic, accidental energization, and open breaker detection. By using programmed logic and appropriate protection elements within the MGPS, these functions may be implemented without the additional devices and wiring necessary with more traditional discrete relays. Because the different functions retain their accuracy over a wide frequency range, implementing separate startup or shutdown protection may no longer be necessary.

B. Protection Function Arrangement and Layout

Traditional applications of generator protective relays involved separate relays performing different functions with some overlap and backup where appropriate. In many cases, the generator differential relay was connected to a dedicated set of CTs to address reliability, burden, and CT characteristic matching issues. The low burden of an MGPS allows connection of differential and other protection to the same set of CTs without performance deterioration caused by CT burden. Using a single set of CTs concerns many application engineers because CT inputs are not duplicated in this scheme—resulting in lower reliability. However, if two MGPSs are applied, separate CT and VT inputs are recommended for redundancy.

Integrating many protection functions into one package raises reliability concerns. These issues are addressed by:

- Providing two MGPSs, each with a portion of the protection functions. Redundancy may be available for some or all protection functions.
- Providing backup for critical components, particularly the power supply.
- Using self-checking functions.

These measures help to minimize the effect of a single component failure. MGPS failure may require that the generator be taken out of service. However, present industry practice requires at least two MGPSs for each protection application for a generator that cannot be taken out of service because of a protective relay loss. In some cases, a redundant single-function relay, such as overall differential, may be applied in addition to the MGPS.

In the MGPS, self-tests and diagnostics detect many failure modes and alert the user through alarm outputs. The ability to detect and correct a failure before the protection system needs to operate is a contrast to traditional protection, where a relay failure would probably not be detected until the next maintenance test or until the relay false trips or fails to operate correctly during an event.

If two MGPSs are applied, the user has a number of choices on what protection function to include in each one. Some MGPSs provide full-function protection for large or important generators. Other MGPSs provide reduced protection functions for smaller or less important generators. Some MGPSs also provide user-configurable protection functions. Users should take into account factors such as the degree of redundancy required, oscillographic and communications capabilities, cost, training requirements, and preference for a particular design approach.

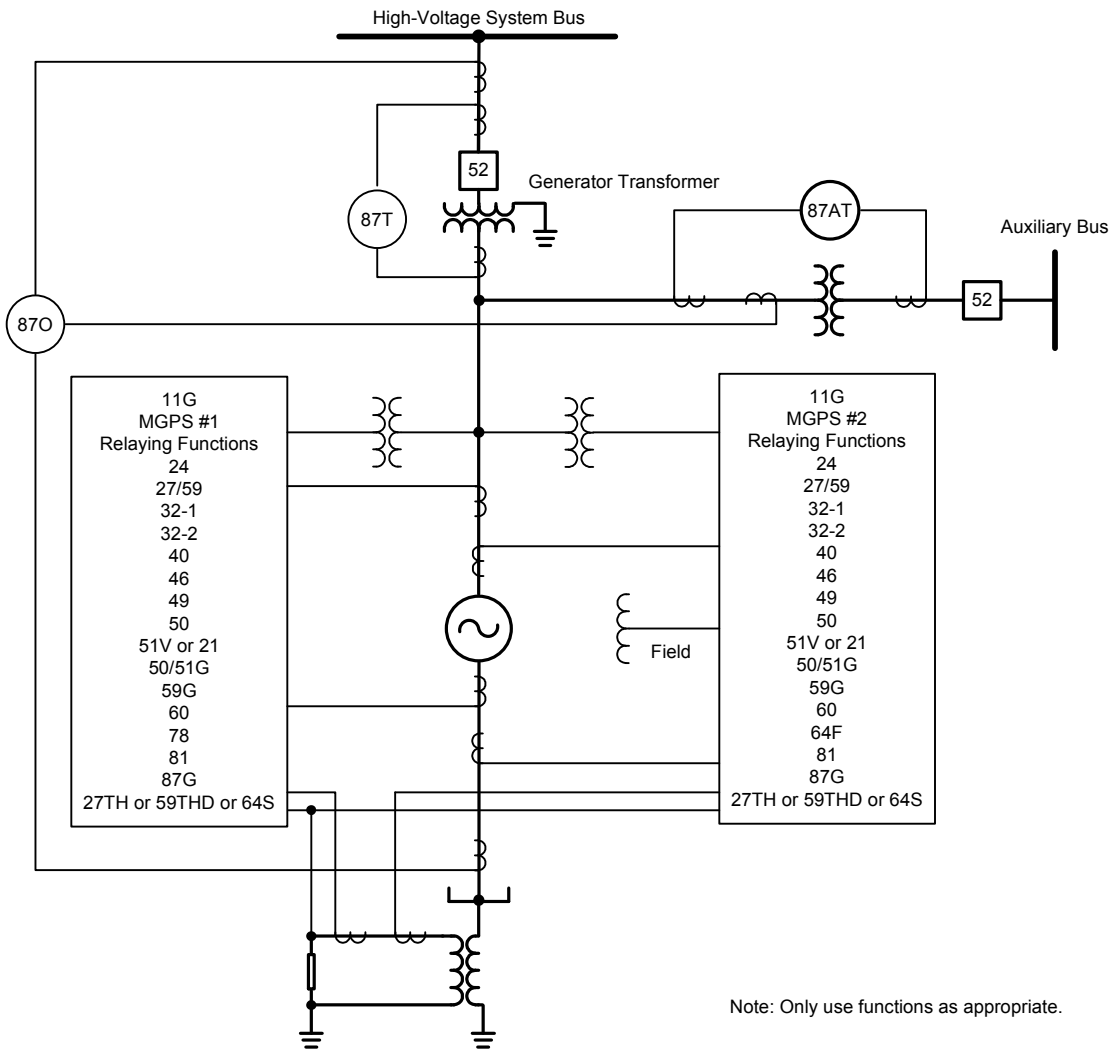

Fig. 2. Typical Protection for a Large or Important Generator

Fig. 2 is an example of a large or important unit generator-transformer configuration with two MGPSs, applied with redundant protection functions. This figure shows both MGPSs with almost the same protection functions. However, the application of two MGPSs allows the user to apply devices incorporating different operating principles that may improve the overall dependability of the protection scheme.

Each of the MGPSs has separate dc-to-dc power supplies and tripping circuits. The built-in self-monitoring and diagnostic functions are always online and detect many relay failures, thereby reducing the likelihood of false operation. Periodic testing and preventive maintenance may be reduced to a minimum because only the items and responses not fully covered by the self-monitoring and diagnostic functions need to be checked. If provided, the status of each MGPS may be determined by the station control system by cyclically interrogating the diagnostic function via the communications link. This check confirms that the self-monitoring system is working and the protection is available. Most available functions in various MGPSs are shown in Fig. 2. Actual functions available depend on the specific MGPS selected. Also, the inputs (CT, VT, and RTDs [resistance temperature detectors], etc.) shown may vary depending on specific functions used.

C. Protection Function Tripping Schemes

The selection of a trip or alarm action produced by the operation of different protection functions varies by user, depending on their experience, philosophy, interpretation of standards, and turbine-generator manufacturer's recommendations. Many MGPSs allow the user the flexibility to route any individual protection function data to selected trip or alarm relay outputs. This design allows the trip scheme and logic to be configured for redundant trip paths to eliminate single-contingency failures of the trip relay. Additionally, this trip logic enables the user to consider the generator and prime mover's operational capabilities (type of prime mover, system configuration, regulator response, and boiler and governor control systems) to avoid unnecessarily stressing the unit. Four methods of isolating a unit (tripping) should be considered when applying an MGPS: simultaneous tripping, generator tripping, unit separation tripping, and sequential tripping (see Chapter 5.1).

The trip scheme shown in Fig. 3 employs more than one lockout relay (86) because different conditions dictate different types of tripping. Conditions such as generator and main transformer faults require the immediate and simultaneous tripping of the generator circuit breaker(s), field circuit breaker, and prime mover to minimize damage to the unit and disturbance to the system. Operating functions, such as negative-sequence current or abnormal frequency, require separation of the generator from the system but not necessarily tripping of the field circuit breaker or prime mover. Therefore, unit separation tripping may be appropriate. The reverse power function is shown as part of sequential tripping control logic. In this example, generator tripping is initiated by a combination of the reverse power function contact in conjunction with the turbine trip indication. Other functions, such as thermal protection, may only necessitate operator action and may alarm. The user should evaluate each function's impact on the equipment and system before determining the trip logic. The specific application should also be discussed with the turbine-generator manufacturer.

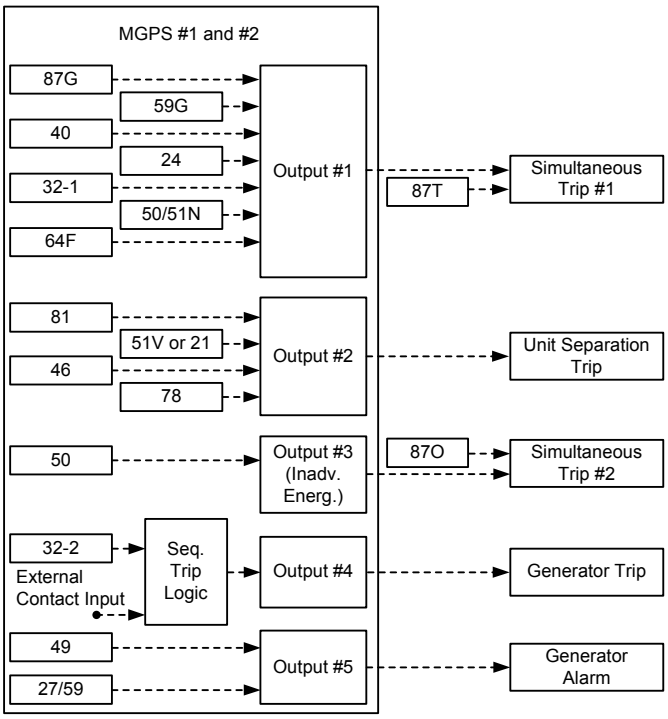

Note: Only use functions as appropriate.

Fig. 3. Typical Tripping Configuration for a Large or Important Generator

Fig. 3 shows the implementation of tripping logic for the protection of a unit-transformer configuration using MGPSs. Using two MGPSs allows further flexibility in the tripping logic configuration by eliminating common mode failures, thus allowing greater dependability. Initiating different lockout relays for the same function, such as the generator differentials on each MGPS, is an example of greater dependability. Initiating those same lockout relays, one with a generator neutral ground overvoltage function (59G) from one MGPS and the other MGPS with a generator neutral ground overcurrent function (50/51G), is an example of providing redundant protection using alternative functions as a means of improving dependability.

III. MGPS Testing

A. Evaluation Testing

Evaluation testing by the user or a third party provides demonstrated background and understanding of the functions and performance of the MGPS. This optimizes the utilization of the MGPS in that the understanding gained from the tests helps to determine the requirements for acceptable dependability (e.g., what functions, if any, should be duplicated) and the applicable commissioning and maintenance procedures.

B. Acceptance Testing

Many users subject all relays to acceptance testing. With an MGPS, consideration should be given to reducing the number of tests by designing the test program to exercise the integrity of each of the necessary hardware components, rather than each of the relaying functions (overvoltage, reverse power, loss of field, etc.). Evaluation testing as described previously may define the desirable complement of tests. Also, in the interest of producing an acceptance plan that is both efficient and thorough, the user may wish to look to the MGPS manufacturer for guidance because of their detailed knowledge of the MGPS design.

C. Commissioning and Maintenance Testing

Because the different functions in the MGPS operate on the same set of voltages, currents, and programmable logic available for output tripping, the commissioning tests on external wiring and trip circuits are simplified. Moreover, because each function shares analog inputs, testing of the individual relay functions for a given group of settings is easier to set up and perform than if these functions were in discrete relays. However, because more than one function may operate for a given set of test parameters and many functions operate the same output contact, identifying which relay element has operated to close the output contact may not be easy. Options to address this situation include:

1. Facilitate testing of individual functions by using an MGPS that provides a test mode in which only a selected function operates the test output contact.
2. Design the test inputs and sequence so that only one function will operate for a given set of test inputs.
3. Use the MGPS event report as an adjunct to the output contact closure.
4. Temporarily reprogram the output to an isolated contact.

Some users will object to the fourth method because a large part of testing an MGPS is to check its programming. The second method requires some planning and proper test equipment. Combining the second and third methods likely will produce a test plan that avoids confusion as to which relay function has caused a trip.

Some considerations for selecting the test parameters include:

- Test functions such as V/Hz, overvoltage, and abnormal frequency with no current applied so that the current and impedance functions will not operate.
- Test V/Hz at less than nominal frequency so that its pickup will be below the setting of voltage and frequency relays.
- Test distance, power, and loss-of-field functions with currents applied to both phase and neutral-side inputs so that the differential function will not operate.

The commissioning tests discussed here may be the result of a task in the evaluation tests discussed previously. Furthermore, periodic maintenance testing may be a subset of the commissioning tests. Maintenance tests should at least verify the proper functioning of all input and output circuits. Some MGPSs provide test access for injecting voltage and current signals for maintenance testing. In deciding the frequency of maintenance testing, self-diagnostic features have justified reduction in the frequency of testing. However in the case of an MGPS, certain caution is also justified because self-diagnostic features do not test the contact inputs or outputs, the failure of which has a larger impact than that of a single-function relay.