Inadvertent Energization Protection

Charles J. Mozina and Sudhir Thakur

***Abstract*—Inadvertent (accidental) energizing of offline synchronous generators has damaged or destroyed a significant number of generators. The frequency of these occurrences has prompted both generator manufacturers as well as IEEE standards to recommend addressing the problem through dedicated protection schemes. This section of the tutorial describes how a generator responds to inadvertent energizing and the subsequent damage that occurs, followed by a discussion of conventional generator protection methods and dedicated protection schemes for detection of inadvertent energizing and generator open breaker flashover.**

I. Introduction

Inadvertent (accidental) energizing of generators occurs frequently enough within the industry to warrant concern. When an offline generator is energized (without field) on turning gear or coasting to a stop, the generator behaves as an induction motor and can be damaged within a few seconds. Turbine damage can also occur. A significant number of large generators have been severely damaged and, in some cases, completely destroyed [1] [2]. The cost to the utilities is not only the repair or replacement cost of damaged generators but also the substantial cost of purchasing replacement power while the unit is out of service. Operating errors, open breaker flashovers, control circuit malfunctions, or combinations of these causes have resulted in inadvertent energizing of offline generators.

A. Operating Errors

Operating errors are increasing within the industry as high-voltage generating stations become more complex with the use of breaker-and-a-half and ring-bus configurations. Fig. 1 shows typical one-line diagrams for two such stations.

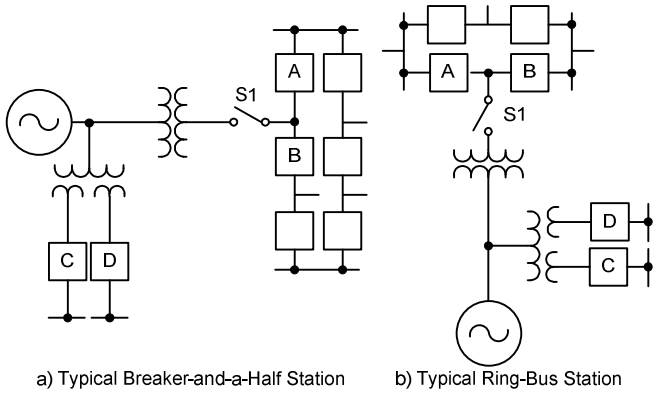

Fig. 1. One-Line Diagrams of Typical Generator Stations

These station designs provide sufficient flexibility to allow a single high-voltage generator breaker (A or B) to be taken out of service without also requiring the unit to be removed from service. Breaker disconnect switches (not shown) are available to isolate the breaker for repair. When the unit is offline, however, generator breakers (A and B) are generally returned to service as bus breakers to complete a row in a breaker-and-a-half station or to complete a ring bus. This practice results in a generator that is isolated from the system through only an open high-voltage disconnect switch (S1). Removing generator straps or other sectionalizing devices in the generator isophase bus can provide additional isolation from the power system. Generally, these isophase bus devices are opened to provide safety clearances or isolation for extended unit outages. In many instances, the high-voltage disconnect switch (S1) provides the only isolation between the generator and the system. Even with extensive interlocks between the generator breakers (A and B) and the disconnect switch (S1) to prevent accidental switch closure, a significant number of cases have been recorded of offline units inadvertently energized through this disconnect switch. The possibility that some or all generator protection, deliberately or unintentionally, may be disabled during this period compounds the problem.

Another path for inadvertent energizing of a generator is through the unit auxiliary system by accidental closure of unit auxiliary transformer breakers (C or D). Due to the higher impedance in this path, the currents and resulting damage are much lower than those experienced by the generator when inadvertently energized from the generator step-up transformer and high-voltage switchyard.

B. Open Breaker Flashovers [3]

The extreme dielectric stress associated with HV (high-voltage) and EHV (extra-high voltage) breakers and the small contact gap spacing associated with their high-speed interrupting requirement can lead to open breaker flashover. This flashover (generally one or two poles) is another method by which generators have been inadvertently energized. The flashover risk is greatest just prior to synchronizing or just after the unit is removed from service. During this period, the voltage across the open generator breaker can be twice normal as the unit slips angularly with the system to 180 degrees out of phase. A loss of SF_6 gas pressure in some types of HV and EHV breakers during this time can result in the flashover of one or more breaker pole(s). This event can energize the generator and cause a significant flow of damaging unbalanced current in the generator windings. This unique

breaker failure condition must be quickly detected and isolated to prevent major generator damage.

Generators connected to the system through low-voltage generator breakers have also been inadvertently energized. Using these generator breakers allows more operating flexibility than the traditional unit-connected configuration. Fig. 2 shows a typical one-line diagram for this design.

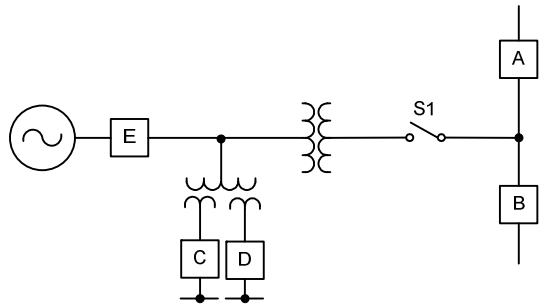

Fig. 2. Station With Low-Voltage Generator Breaker

When the generator is offline, Breaker E is opened to provide isolation from the system. This allows the unit auxiliary transformer to remain energized, carrying load when the generator is out of service, and provides startup power when the generator is brought online. Accidental closures of Breaker E and open breaker flashovers resulting from the loss of dielectric strength have been reported.

II. Generator Response to Inadvertent Energizing

A. Three-Phase Energizing

A generator that is inadvertently energized with three-phase system voltage while on turning gear behaves as an induction motor. During three-phase energizing at standstill, a rotating flux at synchronous frequency is induced in the generator rotor. The resulting rotor current is forced into subtransient paths in the rotor body and damper windings (if they exist), similar to those rotor current paths for negative-sequence stator currents during generator single phasing. The generator impedance during this high-slip interval is equivalent to its negative-sequence reactance. The generator negative-sequence reactance is approximately equal to the average of the direct and quadrature subtransient reactances $(X_d'' + X_q'')/2$. The generator terminal voltage and current during this period will be a function of the generator, unit step-up transformer, and system impedances. When a generator is inadvertently energized, the generator stator current induces high magnitudes of current in the generator rotor, causing rapid thermal heating. This rotor current is initially 60 Hz but decreases in frequency as the rotor speed increases because of induction motor acceleration action.

If the generator is connected to a strong system, the initial stator currents will be in the range of three to four times rating, and the terminal voltage will be in the range of 50 to 70 percent of rating for typical values of generator and step-up transformer impedances. If the generator is connected to a weak system, generator stator current may only be one to two times rating and the terminal voltage only 20 to 40 percent of rating. When the generator is inadvertently energized from its auxiliary transformer, stator current will be in the range of 0.1 to 0.2 times rating because of the high impedance in this path. The equivalent circuit shown in Appendix I can be used to approximate the initial generator currents and voltages when a generator is inadvertently energized from the power system.

B. Single-Phase Energizing

Single-phase energizing of a generator from the high-voltage system while at standstill subjects the generator to a significant unbalanced current. The unbalanced current causes negative-sequence current flow and thermal rotor heating similar to that caused by three-phase energizing. There will be no significant accelerating torque if the voltage applied to the generator is single-phase and the unit is essentially at standstill. Both positive- and negative-sequence currents will flow in the stator, and each will induce approximately 60 Hz currents in the rotor. This produces magnetic fields in opposite directions—essentially producing no net accelerating torque. If single-phase voltage is applied when the unit is not at standstill but, for instance, at half-rated speed, the accelerating torque due to positive-sequence current will be greater than the retarding torque due to negative-sequence current, and the unit will accelerate.

Open breaker flashover is the most frequent cause of single-phase inadvertent energizing. This situation is most likely to occur just prior to synchronizing or just after the unit is removed from service when the generator and system voltages are 180 degrees out of phase. The initial magnitude of stator current and voltage can be calculated using the symmetrical component equivalent circuit shown in Appendix II for a generator that is energized from one phase and connected to the power system through a delta-wye grounded step-up transformer.

III. Generator Damage Due to Inadvertent Energizing

The initial effect of inadvertent energizing of a generator from standstill or on turning gear is rapid heating in the iron paths near the rotor surface due to stator induced current. These paths primarily consist of the wedges, rotor iron, and retaining rings. The contacts between these components are points where a localized, rapid temperature rise occurs, mainly because of arcing. The depth of current penetration is a fraction of an inch, considerably less than the depth of the rotor windings. Wedges, for example, have little “clamping” load at standstill, resulting in arcing between them and the rotor iron. The arc heating begins to melt the metal and may cause wedges to be weakened to the point of immediate or eventual failure, depending upon the tripping time to clear the inadvertent energizing incident. Damage to rotor windings, if it occurs, results from mechanical damage because of loss of wedge support rather than heating. Because of the low depth of current penetration, the rotor windings would not likely experience an excessive temperature rise and, therefore, would not be thermally damaged.

Generalized heating of the rotor surface to an excessive temperature takes longer than the localized areas described, but if tripping is delayed, the rotor will be damaged beyond repair. The current magnitudes in the stator during this incident are generally within its short-time thermal capability; however, if rotor heating continues, wedges or other portions of the rotor may break off and damage the stator. This may result in total loss of the generator.

The time after which rotor damage will generally occur can be approximated by using the equation for the short-time negative-sequence capability of the generator, $I_2^2 t = K$. When the generator is at or near standstill and is inadvertently energized from either a single- or three-phase source, the value of I_2 used in this formula should be the per-unit magnitude of generator phase current flowing in the machine windings. If the generator is energized from a single-phase source at or near synchronous speed, the negative-sequence component of current should be used. The equivalent circuits in Appendix I and Appendix II can be used to determine the value of current for these situations.

In the case of a cross-compound unit, sufficient field is applied at a very low speed to keep the generators in synchronism as they come up to speed. Inadvertent application of three-phase voltage will attempt to start both generators as induction motors. The thermal hazard to the rotor is the same as when no field is applied and aggravated by the current in the rotor field winding.

Hydroelectric generators are salient-pole generators and are usually provided with damper windings on each pole. These damper windings may or may not be connected together. Inadvertent energizing may create sufficient torque in the rotor to produce some rotation. More importantly, the thermal capacity of the damper winding, especially at the point of connection to the pole steel, is not adequate for the resulting currents. The heating of the connecting points, combined with the lack of proper ventilation, creates damage quickly. Since hydroelectric generator design is unique, each unit needs to be evaluated for the detrimental effects of inadvertent energizing.

IV. Response of Conventional Generator Protection to Inadvertent Energizing

As part of the typical complement of generator protection, the following five protection elements may detect or can be set to detect inadvertent energizing:

- Loss-of-field protection
- Reverse power
- Negative-sequence overcurrent
- Breaker failure
- System backup

A. Disabled Protection

Inadvertent energization protection needs to be in service when the generator is out of service. This is the opposite of normal protection. Frequently, utilities disable generator protection when the unit is offline to prevent undesirable tripping of generator EHV breakers that have been returned to service as bus breakers in breaker-and-a-half and ring-bus substations. It is also a common operating practice to remove generator voltage transformer (VT) fuses as a safety practice when the generator is removed from service. This disables voltage-dependent relays from providing inadvertent energization protection. Many utilities use auxiliary contacts (52a) of the generator high-voltage disconnect switch to automatically disable generator protection when the unit is offline. This technique can prevent the relays from being operative for inadvertent energization protection. In many cases, engineers who rely on the normal complement of generator relaying for inadvertent energization protection fail to recognize these common operating and/or control practices that disable protection.

B. Loss of Field

Loss-of-field relay schemes are voltage dependent. If the potential source is disconnected when the unit is offline, the loss-of-field relay will not operate. Note that the loss-of-field relay is often removed from service by a disconnect switch and/or breaker 52a contacts when the machine is offline. Therefore, depending upon how the inadvertent energizing occurs, the loss-of-field protection may be disabled. When enabled during an inadvertent energizing condition, the loss-of-field relay may or may not detect this event and should not be relied upon for protection.

C. Reverse Power

The resulting power level from inadvertent energizing will generally be within the pickup range of the reverse power relay. Tripping by reverse power relays is substantially delayed (usually 30 seconds or longer), which is much too long to prevent generator damage. In some types of electromechanical reverse power relays, this time delay is introduced through an ac voltage-operated timer whose pickup level requires that 50 percent of rated terminal voltage be present. If the generator terminal voltage is below this level, the relay will not operate. If the potential supply is disconnected, the reverse power relay may also fail to operate.

D. Negative-Sequence Overcurrent

It is common practice to provide generator protection from external unbalanced conditions that might damage the generator. This protection consists of a time-overcurrent relay that responds to negative-sequence current. Two types of relays are used for this protection: an electromechanical time-overcurrent relay and a static/digital relay with a time-overcurrent characteristic, which matches the $I_2^2 t = K$ capability curve of the generator. The electromechanical relay was designed primarily to provide machine protection for uncleared, unbalanced system faults. The negative-sequence current pickup of this relay is generally 0.6 per unit of rated full-load generator current. The static and digital relays are much more sensitive and capable of detecting and tripping for negative-sequence currents down to the continuous capability of the generator. Therefore, the static and digital negative-sequence relay will detect single-phase inadvertent energizing

for most cases. The response of the electromechanical relay should be checked to ensure that its setting is sufficiently sensitive, especially in applications in which the unit is connected to a weak system. The tripping of these relays may be supervised by a high-voltage switch or breaker 52a contacts that could render them inoperative for open breaker flashover events where the breaker is mechanically open.

E. Generator Breaker Failure

Generator breaker failure must be initiated to isolate a generator for an inadvertent energization condition due to open breaker flashover. A functional diagram of a typical generator breaker failure scheme is shown in Fig. 3.

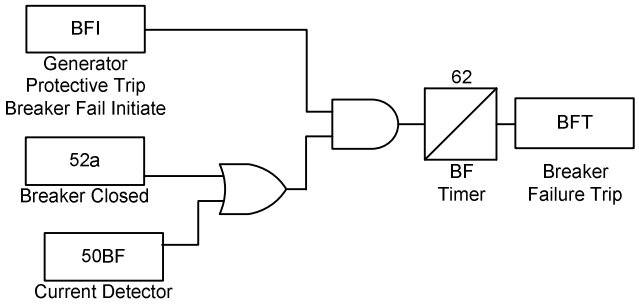

Fig. 3. Generator Breaker Failure Logic

When generator protective relays detect an internal fault or an abnormal condition, they will attempt to trip the generator breakers and at the same time initiate the breaker failure timer(s). If the breaker(s) do not clear the fault or abnormal condition in a specified time, the timer will trip the necessary backup breakers to remove the generator from the system. The current detector (CD) and the breaker 52a auxiliary contact are used to detect that the breaker has successfully opened. The breaker 52a auxiliary contact must be used in this case because faults and/or abnormal generator conditions will not produce sufficient current to operate the CD. If one or two poles of a breaker flash over to energize a generator, two conditions must be satisfied to initiate breaker failure:

- The flashover must be detected by a generator protective relay that initiates the breaker failure relay.
- The breaker failure CD must be set with sufficient sensitivity to detect the flashover condition.

F. System Backup Relays

Impedance (with reverse reach) and voltage-restrained or controlled overcurrent relays that are used to provide backup for generator protection can be adjusted to provide detection of three-phase inadvertent energizing. However, their operation should be checked by comparing their settings with expected generator terminal conditions for inadvertent energizing. These backup relays have a time delay associated with tripping that is generally too long to prevent generator damage. Attempts to reduce this time delay usually result in false tripping for stable power swings or loss of coordination under fault conditions. Also, operation of the particular type of relay used should be reviewed for the condition when polarizing or restraining potential has been disconnected.

V. Dedicated Protection Schemes to Detect Inadvertent Energizing

Because of the severe limitation of conventional generator relaying to detect inadvertent energizing, dedicated protection schemes have been developed and installed [4]. Unlike conventional protection schemes that provide protection when equipment is in service, the dedicated schemes provide protection when equipment is out of service. Thus, great care should be taken when implementing this protection so that dc tripping power and relay input quantities to the scheme are not removed when the protected unit is offline.

This section describes a number of dedicated inadvertent energization protection schemes for units without low-voltage generator breakers. The judicious selection of input sources allows most of these schemes to be applied to generators with low-voltage generator breakers. Whatever scheme is used to provide protection for inadvertently energizing a generator, the protection should be connected to trip the generator high-voltage and field breakers, trip the unit auxiliary breakers, initiate generator high-voltage breaker failure backup tripping, and not disable the protection when the generator is out of service.

A. Directional Overcurrent

The directional overcurrent scheme has three directional inverse-time overcurrent relays that use current and voltage sensing from the generator terminals. Choosing a relay with a maximum sensitivity angle combined with the current transformer connection is necessary to ensure that the underexcited loading capability of the generator is not appreciably impaired. The setting used may involve a compromise between desired sensitivity and a setting at which the relay will not be thermally damaged by generator full-load current. This scheme is dependent on potential available for operation. Thus, if operating procedures dictate removing voltage transformer fuses when the generator is offline, this scheme is not recommended.

B. Frequency Supervised Overcurrent

The frequency supervised overcurrent scheme uses a combination of frequency and overcurrent relays that are only enabled when the generator is offline. The current relays are instantaneous overcurrent with a pickup setting of about half of the expected inadvertent energizing current. The underfrequency relays are set to close their contacts when the frequency falls below the setting that is in the range of 48 to 55 Hz, thus enabling the overcurrent relay. This scheme requires pickup and dropout time delays and voltage balance supervision to prevent misoperation. For this scheme to work properly, the underfrequency relay contact needs to be closed when there is no voltage. Underfrequency relays that do not operate below 50 percent voltage should not be used for this application.

C. Distance Relay

A number of schemes are available that use distance relays polarized to respond to current flow into the generator from

the high-voltage switchyard. The distance relay is set to detect the sum of the reactance of the unit step-up transformer and generator negative-sequence reactance with appropriate margin. In some cases, the distance relay is supervised by an instantaneous overcurrent relay to prevent false operation on loss-of-potential. Because the impedance relay may operate for stable power swings, a thorough stability analysis is required to ensure the relay will not operate for such swings. Additional protection is required for single-phase energizing, because the distance relay has limited capability to detect this condition. Also, to prevent undesirable operations on stable swings, a 0.1-second delay of relay operation may be desirable.

D. Voltage Supervised Overcurrent

The voltage supervised overcurrent scheme, shown in Fig. 4, uses phase undervoltage elements with pickup and dropout time delays to supervise instantaneous overcurrent tripping relays. After a time delay, the undervoltage element automatically arms the overcurrent relays when generation is taken offline. When voltage exceeds the undervoltage relay setting, the scheme is disabled after a time delay (dropout time) so that it is not in-service when the generator returns to service. Setting the undervoltage element below 50 percent of nominal ensures that the overcurrent element does not arm during stressed system conditions. This scheme uses potential from the generator voltage transformers but will work properly even if voltage transformer fuses are removed when the generator is offline. Voltage balance relay supervision or other VT fuse loss detection logic is required to prevent possible misoperation that may result from loss-of-potential due to VT fuse blowing. Some digital relay loss-of-potential schemes use the following logic. If current is detected with no voltage, a loss-of-potential condition exists. This logic blocks the inadvertent energizing scheme for events when VT fuses are removed while the generator is offline. In some schemes, loss-of-potential security is provided by requiring all three phase voltages be below the voltage relay setting. This scheme is well suited for location in the transmission switchyard, where the scheme is less likely to be accidentally removed from service during generator maintenance [5]. This is the most popular scheme for inadvertent generator energization protection and has been incorporated into many digital generator multifunction relays.

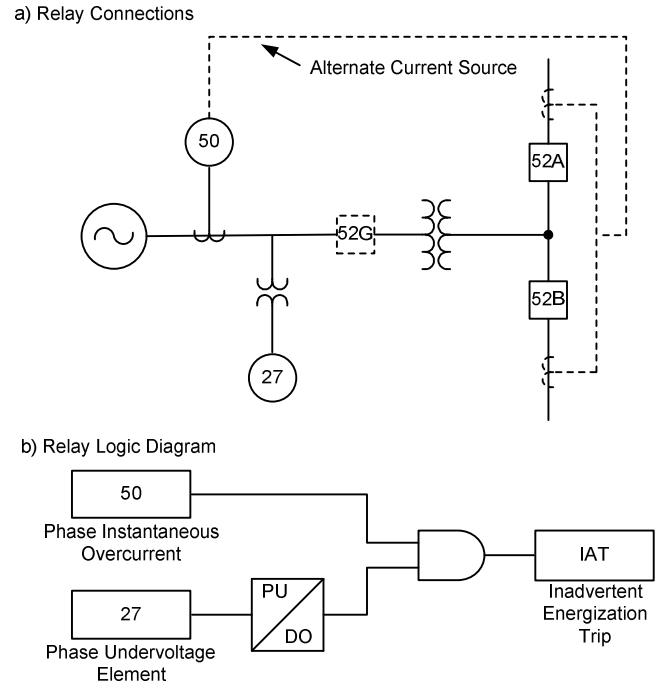

Fig. 4. Voltage Supervised Overcurrent Scheme

E. Auxiliary Contact-Enabled Overcurrent

The auxiliary contact-enabled overcurrent scheme uses the generator field breaker auxiliary contacts to enable nondirectional instantaneous overcurrent relays when the field breaker is either open or racked out. In some cases, a speed switch is used. Overcurrent relays are set for 50 percent of the minimum accidental energizing current.

Coordination time delays are used to prevent misoperation. Although this scheme will not provide protection after the field is applied to the unit, it is preferred over the scheme that uses the auxiliary contacts of a motor-operated disconnect and high-voltage generator breakers to supervise the same nondirectional instantaneous relays. This latter scheme will provide accidental energization protection regardless of the frequency or voltage applied to the unit. The drawbacks to this scheme are the complexity of the contact logic and the unreliability of the auxiliary contacts, particularly those on the motor-operated disconnect. This kind of offline supervision should be avoided. **Caution:** If the motor is disengaged from the disconnect switch such that the auxiliary contacts do not follow the switch position, inadvertent energization protection may not be enabled when required to operate.

F. Overcurrent Supervised by Multiple Elements

Security is enhanced by using a combination of elements to supervise the low-set nondirectional overcurrent element. One common scheme requires an AND condition of field breaker open, low terminal voltage, and low current to determine the unit is offline and arm the protection. See Fig. 5. The scheme is armed several seconds after the unit is determined to be offline when all three conditions are true. The dropout delay of the arming/disarming timer provides a window of opportunity to trip on overcurrent when voltages and/or currents are detected during the inadvertent energization event. After the dropout delay, the scheme is disarmed once the field breaker is closed as the unit prepares for synchronization. The short tripping delay is included to ride through inrush current that may occur when the field is applied. The trip delay timer must be set shorter than the arming/disarming timer dropout delay.

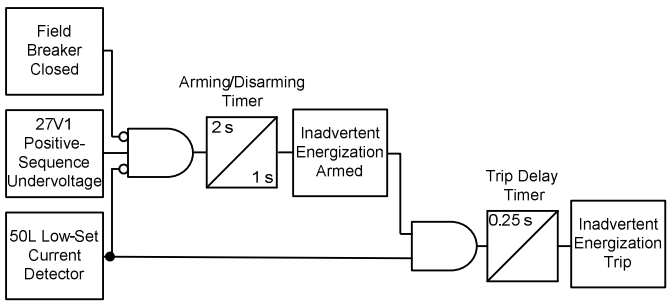

Fig. 5. Multiple Element Supervised Scheme

VI. Dedicated Protection Schemes to Detect Generator Open Breaker Flashover

For the flashover of a generator high-voltage breaker pole, retripping the breaker will not de-energize the generator. The initiation of breaker failure relaying is required to trip additional local and possibly remote breakers to de-energize the generator. Some of the schemes discussed in the Section V can be set to detect open breaker flashovers and provide protection in conjunction with generator breaker failure protection. Chapter 2.5 describes details of generator breaker failure protection. Other schemes are inoperative when the generator is near rated speed and voltage prior to synchronizing and must be supplemented by additional protection.

Unbalanced currents associated with open breaker flashover generally cause the generator negative-sequence overcurrent protection to operate. Breaker failure initiates if the breaker failure current detectors are set with sufficient sensitivity to detect the situation. Schemes specifically designed to speed up the detection and isolation of this unique form of breaker failure are described next.

A. Modified Breaker Failure Logic

One approach to speed up the detection of an open breaker flashover is to modify the breaker failure scheme as shown in Fig. 6. An instantaneous overcurrent relay (50G) is connected in the neutral of the generator step-up transformer and set to respond to an EHV open breaker flashover. The relay output is supervised by the generator breaker 52b auxiliary contact that provides an additional start to the breaker failure scheme. When the generator breaker is open and one or two poles of the breaker flash over, the resulting transformer neutral current is detected by the 50G relay without the delay that would be associated with negative-sequence overcurrent or some of the previously described inadvertent energizing schemes. The CDs associated with the generator breaker failure scheme *must* be set with sufficient sensitivity to detect this flashover condition.

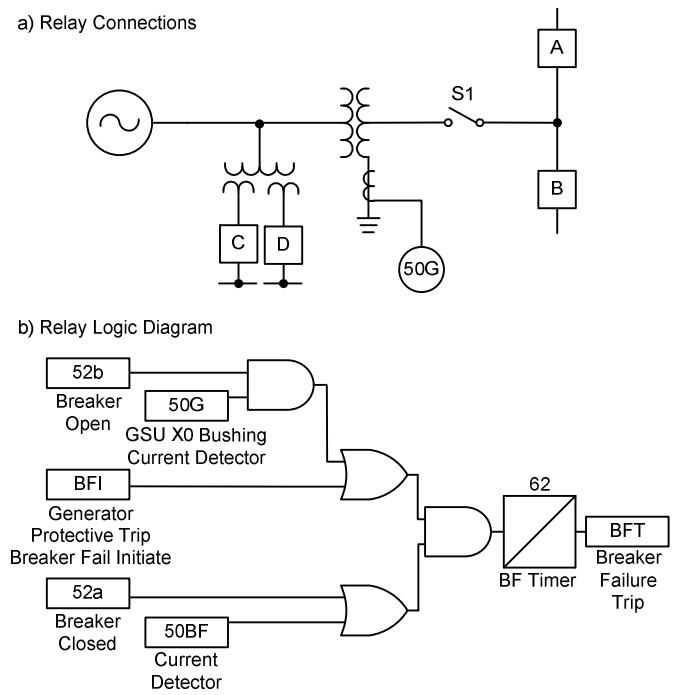

Fig. 6. Modified Breaker Failure Logic

B. Breaker Pole Disagreement

In general practice, high-voltage EHV breakers are designed with independent pole operating mechanisms. For unsymmetrical pole closures, the breakers are protected by an interconnection of auxiliary contacts. If any pole is closed at the same time that another is open, a path is provided to initiate tripping of the breaker. Because breaker auxiliary contact indications do not provide positive indication of pole position, these schemes can be augmented by a relay that monitors three-phase current flowing through the breaker and senses whether any phase is below a certain low threshold level (indicating an open breaker pole) at the same time that any other phase is above a substantially higher threshold level (indicating a closed or flashed-over pole). For breaker-and-a-half and ring-bus applications, zero-sequence voltage across the breaker is used to supervise the relay tripping. This prevents false operation due to unbalanced currents caused by dissimilarities in bus-phase impedances. Thus, this current-monitored pole disagreement relay provides a method of detecting generator open breaker flashovers, but tripping is generally delayed 0.5 seconds. Reference [6] provides a detailed description of this relay.

VII. Conclusions

Inadvertent energizing of synchronous generators has become a significant problem within the industry as generating stations have become more complex. The widespread use of breaker-and-a-half and ring-bus schemes adds significant operating flexibility to high-voltage generating stations. These configurations have also increased complexity and the risk of the generator being inadvertently energized while offline. Operating errors, open breaker flashovers, control circuit malfunctions, or combinations of these conditions may result in inadvertently energized generators.

Because damage to the generator can occur within a few seconds, the event must be detected and isolated by automatic relay action. Although there are relays used as part of the normal complement of generator protection, their ability to detect inadvertent generator energizing is often marginal. These relays are generally disabled at the time when the generator is inadvertently energized, or they operate too slowly to prevent damage to the generator and/or turbine. For these reasons, turbine generator manufacturers have recommended, and many utilities are installing, dedicated inadvertent energization protection schemes.

The major schemes in service in the United States have been described in this section of the tutorial. These schemes vary because of the different operating practices and protection philosophies of utilities. Protection engineers must assess the risks and determine the impact on protection philosophies and their company operating practices prior to deciding which scheme best suits their particular needs. It is hoped that this information will assist in that task.

VIII. Appendix I

Fig. 7 and the following equations show the calculation of initial currents and voltages when a generator is energized from a three-phase source.

The following terms are used in Fig. 7:

X_{1S} = system positive-sequence reactance

X_{1T} = transformer positive-sequence reactance

X_{2G} = generator negative-sequence reactance

R_{2G} = generator negative-sequence resistance

E_S = system voltage

E_T = transformer high-side voltage

E_G = generator terminal voltage

where:

I = current

$P_{3\phi G}$ = generator three-phase power

$$I = \frac{E_S}{X_{1S} + X_{1T} + X_{2G}}$$

$E_G = (I)\,(X_{2G})$

$E_T = (I)\,(X_{2G} + X_{1T})$

$P_{3\phi G} = 3I^2R_{2G}$

IX. Appendix II

Fig. 8, Fig. 9, and Fig. 10 illustrate the calculation of initial currents and voltages when a generator is energized from a single phase source such as an open breaker flashover just prior to synchronizing.

Fig. 9 assumes that flashover occurs when generator and system voltages are 180 degrees out of phase. If there is no field on the machine at the time of inadvertent energizing, the E_G voltage source is zero in the positive-sequence equivalent circuit, where:

X_{1G}, X_{2G}, X_{0G} = generator positive-, negative-, and zero-sequence reactances

X_{1T}, X_{2T}, X_{0T} = unit step-up transformer positive-, negative-, and zero-sequence reactances

X_{1S}, X_{2S}, X_{0S} = system equivalent positive-, negative-, and zero-sequence reactances

E_G = generator voltage

E_S = system voltage

I_1, I_2, I_0 = positive-, negative-, and zero-sequence currents

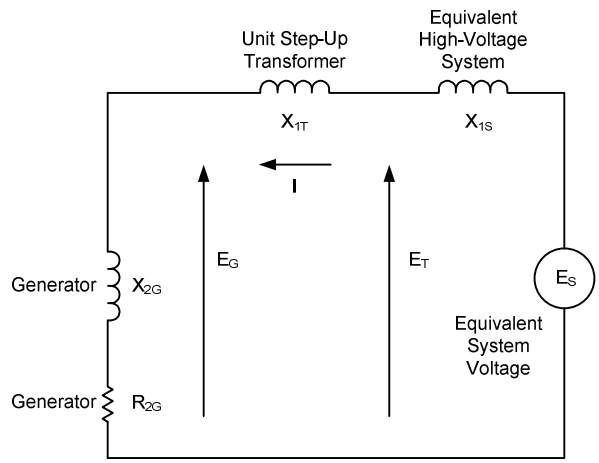

Fig. 7. Approximate Equivalent Circuit

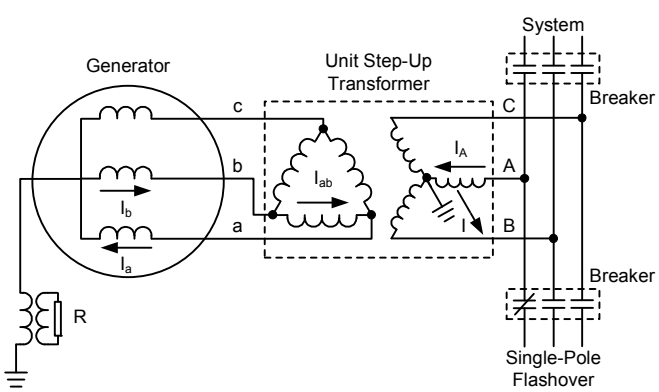

Fig. 8. Open Breaker Flashover

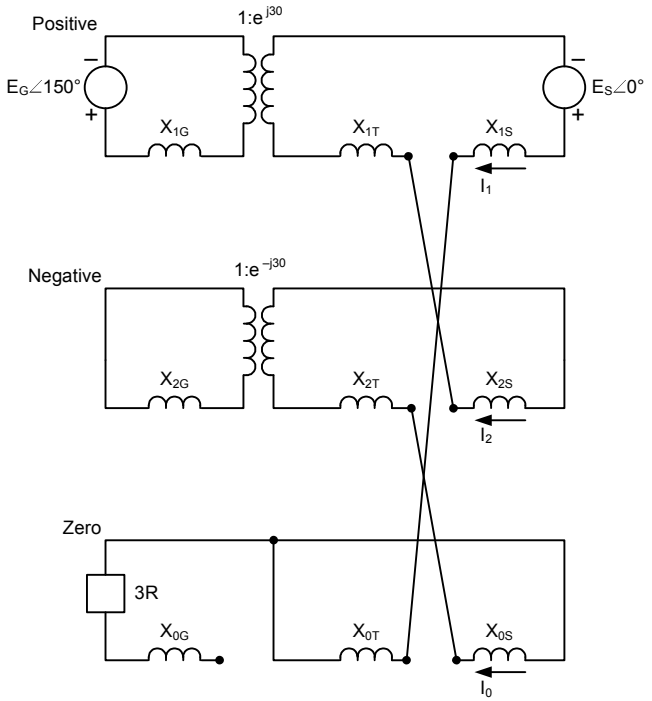

Fig. 9. Symmetrical Component Equivalent Circuit

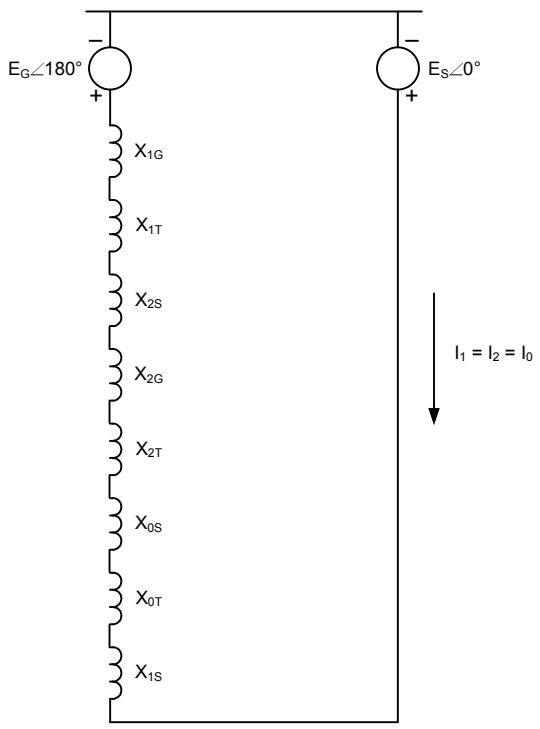

Fig. 10. Simplified Equivalent Circuit

X. References

[1] C. J. Mozina, R. F. Arehart, J. Berdy, J. J. Bonk, S. P. Conrad, A. N. Darlington, W. A. Elmore, H. G. Farley, D. C. Mikell, G. R. Nail, H. O. Ohmstedt, A. C. Pierce, E. T. Sage, D. E. Sanford, L. J. Schulze, W. M. Strang, G. Stranne, F. Tajaddodi, and T. W. Wiedman, "Inadvertent Energizing Protection of Synchronous Generators," *IEEE Transactions on Power Delivery*, vol. 4, issue 2, pp. 965–977, Apr. 1989.

[2] E. R. Detjen, "Some Additional Thoughts on Generator Protection," proceedings of the Pennsylvania Electric Association Relay Committee, May 1981.

[3] J. G. Manzek and J. T. Ullo, "Implementation of an Open Breaker Flashover and Inadvertent Energization Protection Scheme on Generator Circuit Breakers," proceedings of the Pennsylvania Electric Association Relay Committee, Sep. 1983.

[4] *IEEE Guide for AC Generator Protection*, IEEE Standard C37.102-2006.

[5] M. Meisinger, G. Rockefeller, and L. Schulze, "RAGUA: Protection Against Accidental Energization of Synchronous Machines," proceedings of the Pennsylvania Electric Association Relay Committee Meeting, Sep. 1983.

[6] W. A. Elmore and C. L. Wagner, "Pole Disagreement Relaying," proceedings of the 10th Annual Western Relay Conference, Spokane, WA, Oct. 1983.