Field Fault Protection

Sudhir Thakur

Abstract—**This part of the tutorial deals with generator field protection mainly from ground faults and includes these topics:**

- **Hazards of field faults**
- **Field ground protection**
- **Tripping considerations**
- **Field ground relay selection and settings**
- **Field overcurrent**

The field circuit of a generator is an ungrounded dc system. A single ground fault will not generally affect the operation of a generator nor will it produce any immediate damaging effects. However, the probability of the second ground fault occurring is greater after the first ground fault has occurred. When a second ground fault occurs, a portion of the field winding will be short-circuited, thereby producing unbalanced air gap fluxes in the machine. The unbalanced fluxes produce unbalanced magnetic forces that result in machine vibration and damage. A field ground also produces rotor iron heating from the unbalanced currents, which results in unbalanced temperatures that can cause damaging vibration. The tripping practices within the industry for field ground relaying are not well established. Some utilities trip while others prefer to alarm, thereby risking a second ground fault and major damage.

I. Hazards of Field Faults

The field circuit of a generator is an ungrounded dc system. As such, a single ground fault does not generally affect the operations of a generator nor produce any immediate damaging effects. On a first ground fault, no fault current flows and the need for action is not evident. Thus, this condition by itself is not damaging. The concern with this condition is that a second ground will occur. The second ground will bypass a portion of the field winding and unbalance the air gap flux. The unbalanced flux will produce vibration. The degree of unbalance and the resulting vibration depend on the location and extent of the winding bypassed by the two grounds.

The vibration can be severe enough to cause massive damage. This unbalanced force travels with the rotor and can produce very high vibration that may damage bearing pedestals or even displace the rotor by an amount to cause friction with the stator. If only a small portion of the winding is bypassed, the resulting vibration may be undetected.

Even if the second ground does not bypass the field winding significantly, this ground can still cause damage. The field current is diverted, in part at least, from the intervening turns bypassed by the two grounds. This current in the rotor forging causes local heating that can create rotor distortion and eventually produce damaging vibration.

II. Field Ground Protection

Several protection methods can detect rotor field grounds. The protection method depends on the type of excitation system in use. This section discusses five methods for field ground detection.

A. Using a DC Source

The scheme shown in Fig. 1 employs a dc source in series with an overvoltage relay coil that is connected between the negative side of the generator field winding and ground. This scheme is used on generators with brushes. A ground anywhere in the field causes current through the relay. A brush grounds the rotor shaft because the bearing film may insert enough resistance in the circuit for the relay to not operate on a ground fault. The detection sensitivity of this scheme in terms of ground resistance is highly variable. The relay current depends on fault resistance, fault location, and field voltage, which varies with the load on the generator. One to three seconds of time delay helps prevent unnecessary operations for momentary unbalances of the field circuit with respect to the ground. These momentary unbalances may be caused by fast responses of thyristor-type excitation systems.

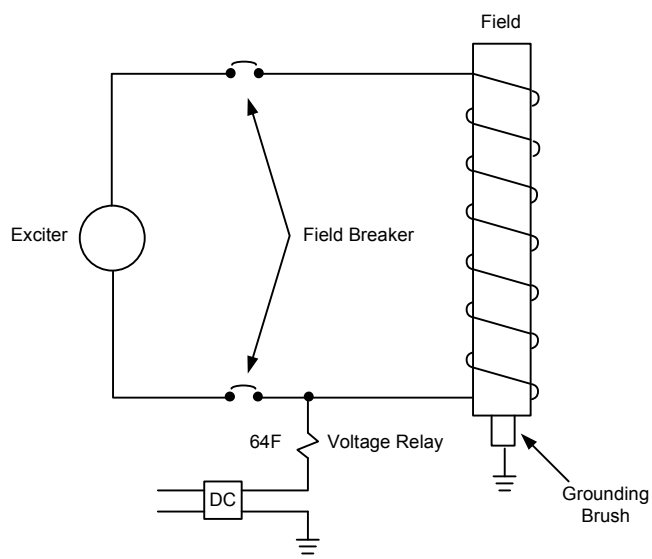

Fig. 1. Field Ground Detection Using a DC Source

B. Nonlinear Voltage Divider Method

Fig. 2 illustrates another method used to detect field circuit grounds on generators with brushes. This method uses a voltage divider and a sensitive voltage relay between the divider midpoint and ground. The voltage divider consists of two standard resistors and one nonlinear resistor. A maximum voltage is impressed on the relay by a ground on either the positive or negative side of the field circuit. However, at the null point between the positive and negative, a ground fault does not produce any voltage across the relay. This is overcome with a nonlinear resistor whose resistance varies with the applied voltage. A manual pushbutton can also be used to shift the null point.

C. Field Ground Detection Using Pilot Brushes

Fig. 3 shows the addition of a pilot brush to gain access to the rotating field parts. Normally, this is not done because eliminating brushes is an advantage of a brushless system. However, detection systems can detect field grounds if a collector ring is provided on the rotating shaft along with a pilot brush that can be dropped periodically to monitor the system. The ground check can be done automatically by a sequencing timer and control or by an operator. A ground fault short circuits the field winding to rotor capacitance, C_R, which unbalances the bridge circuit. If a voltage is read between the ground and the brush, which is connected to one side of the generator field, then a ground exists.

D. Field Ground Detection for Brushless Machines

This section shows a method to detect field grounds for brushless machines.

Fig. 4 illustrates a method for continuous monitoring for field grounds without using pilot brushes. The relay transmitter is mounted on the generator field diode wheel. Its power source is the ac brushless exciter system. Current is determined by the field ground resistance and the location of the fault with respect to the positive and negative bus. The transmitter detects the resistance change between the field winding and rotor core. The transmitter LED (light-emitting diode) emits light for normal conditions. The receiver is mounted on the exciter housing. The receiver infrared detectors sense the light signal from the LED across the air gap. Upon fault detection, the LED turns off. Loss of LED light to the receiver actuates the ground relay and initiates a trip or alarm. To prevent a false trip or alarm, the relay has a settable time delay.

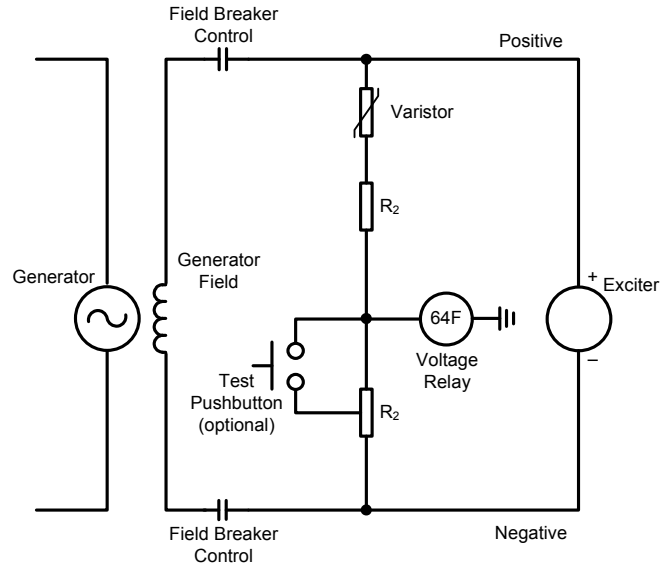

Fig. 2. Field Ground Detection Using a Voltage Divider

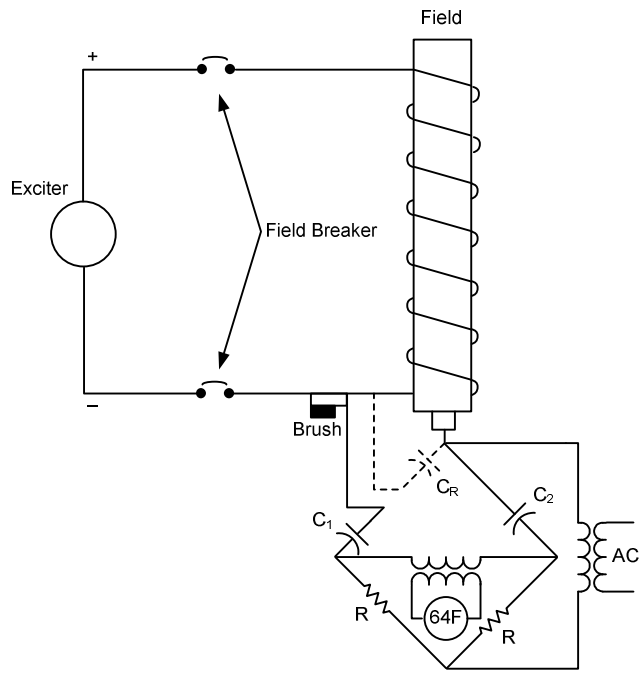

Fig. 3. Field Ground Detection Using Pilot Brushes

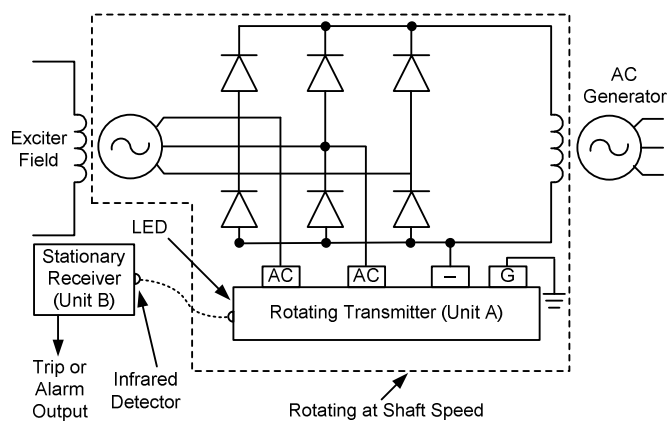

Fig. 4. Field Ground Detection for Brushless Machines

E. Field Ground Detection for Machines With Brushes

Fig. 5 shows a field ground detection scheme using a low-frequency square-wave injection method. A ±15-volt square-wave signal is injected into the field through a coupling network. The return signal waveform is modified because of its field winding capacitance. The injection frequency setting is adjusted (0.1 to 1.0 Hz) to compensate for field winding capacitance. From the input and return voltage signals, the relay calculates the field insulation resistance. The relay set points are in ohms, typically with a 20-kilohm alarm and 5-kilohm trip or critical alarm. Reference [1] provides more detail.

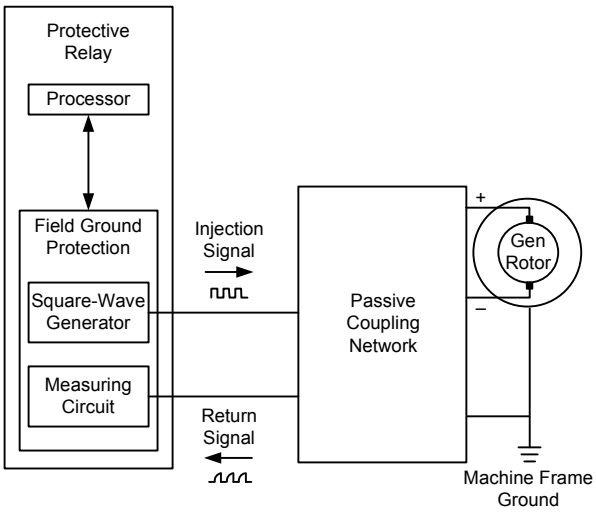

Fig. 5. Field Ground Detection Using an Injection Voltage Signal

III. Tripping Considerations

From a protection viewpoint, immediate tripping is recommended when the first ground is detected. However, most installations alarm. Many utilities have instructions to shut down the machine in an orderly manner if the ground alarm persists. If the alarm option is chosen, vibration monitoring equipment should be included in the design to trip the prime mover and field and generator breakers when the vibration level exceeds that seen at the time of synchronization or for a system fault.

IV. Field Ground Relay Selection and Settings

Field ground relays are selected on the basis of the voltage rating of the field windings. The rating must be higher than the maximum continuous operating voltage. The relays also must withstand the short-time maximum field forcing capability of the excitation system. Relays with time delays can override any transients.

V. Field Overcurrent

The field circuit continuously operates for a field current required for a generator rating at a rated power factor and rated voltage. The field circuit is rated to continuously provide the field current required for the MVA rating at rated power factor and voltage. This field current is called AFFL (amperes of the field at full load). Field current in excess of the rating is required because of power system disturbances, shorted turns, or excitation system malfunctions. The field winding short-time capabilities as defined by [2] are shown in Fig. 6, which shows that rotor winding temperatures under these conditions will exceed rated load values. Reference [3] assumes a maximum of two such operations per year.

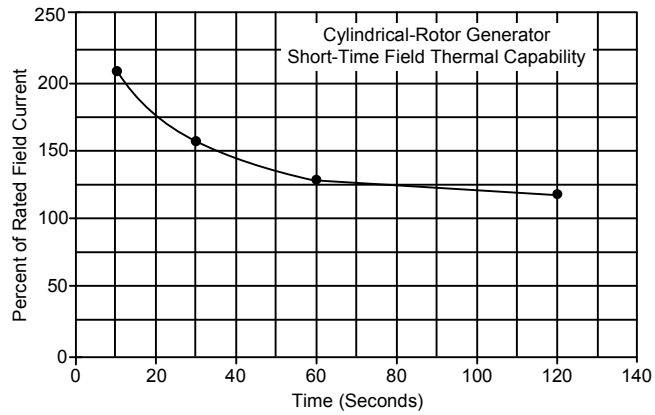

Fig. 6. Generator Field Short-Time Thermal Capability

Overcurrent protection ensures that the thermal capability is not exceeded and that field forcing to the full capability of the winding is also permitted. Field overcurrent protection is provided by means of a direct measurement of field current or field voltage. A dc current relay measures the dc current directly across a shunt. Alternately, a dc voltage can be connected across the field winding. These devices can then trip the prime mover and the field and generator breakers.

VI. References

[1] C. J. Mozina, "Advances in Generator Field Ground Protection Using Digital Technology," proceedings of the Industrial and Commercial Power System Technical Conference, May 2002.

[2] *IEEE Standard for Cylindrical-Rotor 50 Hz and 60 Hz Synchronous Generators Rated 10 MVA and Above*, IEEE Standard C50.13-2005.

[3] *IEEE Guide for AC Generator Protection*, IEEE Standard C37.102-2006.