Stator Phase Fault Protection

Dale Finney and Sungsoo Kim

***Abstract*—A phase fault in a generator stator winding is serious because of the high currents encountered and the potential for damage to the machine windings, shafts, and couplings. To worsen the situation, the fault current in a faulted generator does not stop flowing when the generator field is tripped and the generator is separated from the system. The energy stored in the field will continue to supply fault current for several seconds. Repairing a severely damaged machine can be very expensive and may require long repair times that can generate high costs for replacement power until the machine is restored to service. Minimizing stator fault damage is imperative. High-speed protection on major generator units detects and quickly clears these severe faults. Rapid de-excitation methods that produce a faster decay of damaging fault currents may be justified.**

I. General Considerations

A high-speed differential relay can detect three-phase, phase-to-phase, and double-phase-to-ground faults. Single-phase-to-ground faults are not normally detectable by differential relays on a machine unless its neutral is solidly or low-impedance grounded. When the neutral is grounded through a high impedance, the fault current is usually below the sensitivity of a differential relay.

In addition, a differential relay will not detect a turn-to-turn fault within the same phase because there is no difference in the current flowing into and out of the winding. Separate turn-to-turn fault detection on generators with two or more windings per phase will be discussed subsequently.

Normally generator stator phase fault protection does not need to be concerned with inrush (e.g., a transformer protection scheme), because the generator voltage slowly builds when the field is applied. However, energization of an out-of-zone transformer can cause problems for the generator differential, as described later.

A differential element typically measures a difference current down to about 5 percent of current transformer (CT) nominal secondary current, providing sensitive detection of internal phase faults. Thus, when applying differential protection to a generator, the principal goal is to ensure that an external fault does not produce a misoperation. The maximum fault current is dictated by the subtransient reactance, which is typically in the range of 0.12 to 0.22 pu. This results in a fault current in the range of 6 to 8 pu. Sizing a CT for this value is generally straightforward; however, the system X/R ratio at the generator can be quite high. The resulting dc component of the fault current will decay very slowly. Because the CT flux is a function of the area under the current waveform, the CT can saturate even though the ac fault current magnitude is moderate.

When selecting CTs for the generator differential, IEEE C37.110, IEEE Guide for the Application of Current Transformers Used for Protective Relaying Purposes recommends that "the differential CTs on both sides of a generator should be of the same ratio, rating, connected burden, and preferably have the same manufacturer, so that the excitation characteristics are well matched" [1]. This recommendation ensures that the CTs saturate similarly. Small differences in the CT characteristic or in the secondary burden can produce significant differences in the CT saturation time. Spurious differential currents are at their worst when one CT begins to saturate while the other is still healthy.

When the differential zone spans the generator breaker, the CTs are more likely to be dissimilar because they may have been supplied by different manufacturers. It should be stressed that using the same standard accuracy CTs does not guarantee the same characteristics. Furthermore, because the relay is often installed adjacent to the generator breaker, the secondary leads may be much shorter than those of other CTs installed in the neutral side of the generator CT.

Calculation of time-to-saturate is a practical way to assess CT performance. If an external fault is cleared by downstream protections prior to saturation, the generator differential should not be compromised. Energization of an out-of-zone transformer can cause problems for the generator differential. This is due to the large dc component and long time constant of the inrush current. The phenomenon is essentially the same as that of the external fault case except that in this case the current is not cleared by downstream protections. Some relay manufacturers have developed algorithms intended to improve security for saturation of mismatched CTs. Other manufacturers provide CT oversizing formulas that consider the differential algorithm behavior.

II. Types of Differential Schemes

Three high-speed differential schemes are used for stator phase fault detection: percentage differential, high-impedance differential, and self-balancing differential schemes.

A. Percentage Differential Scheme

The percentage differential scheme achieves security during external faults by employing a restraining signal to bias the operating signal. The operating signal is usually the vector sum of the two CT currents, and the restraining current is usually the average magnitude of the two CT currents. The ratio of the operating signal and restraint signal (slope) may be variable, fixed, or dual slope. See Fig. 1 and Fig. 2. In a variable differential relay, the slope may vary from 5 to 50 percent or more. The slope of the fixed-percentage relay is usually fixed at 10 to 25 percent. In the dual slope relay, Slope 1 is adjustable and set to account for error occurring when the CTs are operating in their linear (nonsaturated) regions. Slope 2 may be fixed or adjustable and is intended to account for error occurring when the CTs are operating in their saturated regions. These relays usually have a minimum pickup setting that is typically set in the 5 to 10 percent (CT nominal) range. A typical scheme using a percentage differential relay is shown in Fig. 3.

B. High-Impedance Differential Scheme

The high-impedance differential scheme employs a stabilizing resistor to provide security for CT saturation during an external fault. The relay is actually a voltage relay and responds to high voltage impressed across its coil, caused by the CTs all trying to force current through the operate winding during an internal fault. These relays should be supplied from identical CTs with fully distributed secondary windings with negligible leakage reactance. The setting of the high-impedance relay is based on the perfect performance of one input CT and the complete saturation of the others.

For very high currents in large generators, the proximity of CTs in different phases to each other can cause unbalanced currents to flow in the CT secondaries. These currents must be less than the minimum sensitivity of the differential relay used. Normally the supplier considers this condition in the unit design, but it should also be checked.

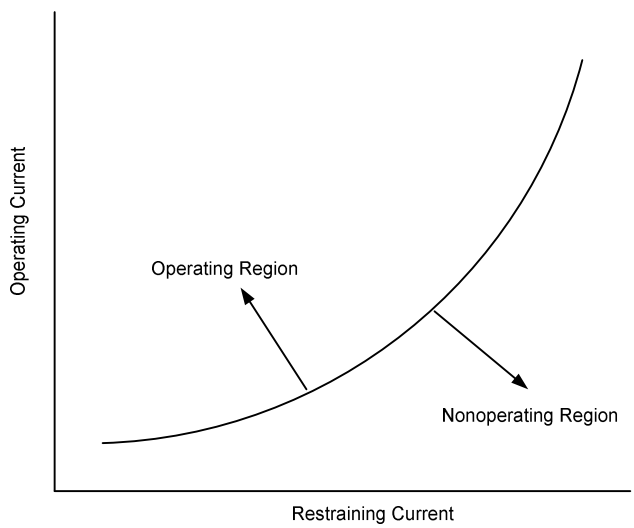

Fig. 1. Variable Slope Percentage Differential Relay

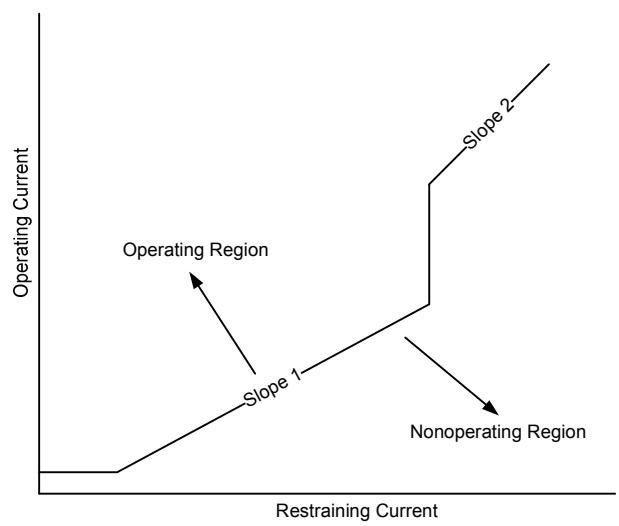

Fig. 2. Dual Slope Percentage Differential Relay

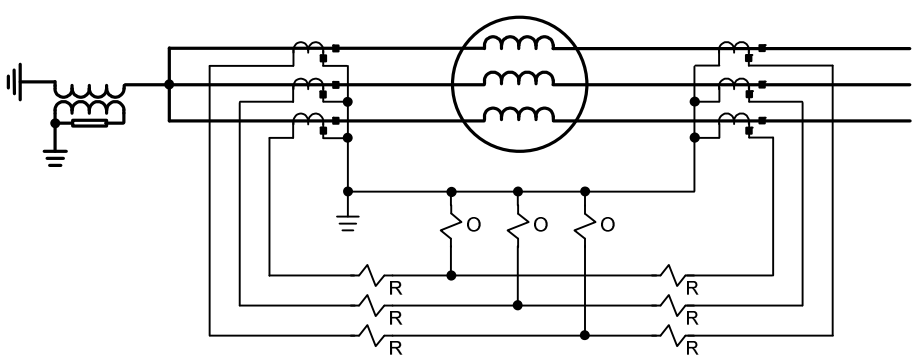

Fig. 3. Percentage Differential Relay Connection: Six-Bushing, Wye-Connected Generator

C. Self-Balancing Differential Scheme

The self-balancing differential scheme, as shown in Fig. 4, typically is used on small generators. This scheme detects phase and ground faults on the generator stator using a single low-ratio CT per phase with the leads of both ends of each winding passing through it, so the net flux is zero for normal conditions. A simple instantaneous overcurrent relay connected to the CT secondary provides fast, reliable protection by detecting any difference between current entering or leaving the winding. The limited size of the CT window limits conductor size and consequently the size of the unit that can be protected. Saturation for external faults is not a concern, but saturation during internal faults is possible. The relay should have as low a burden as possible, typically solid state, to maintain high sensitivity and lessen the likelihood of CT saturation. Very high fault currents can saturate this type of CT if a sensitive electromechanical relay with high burden is used.

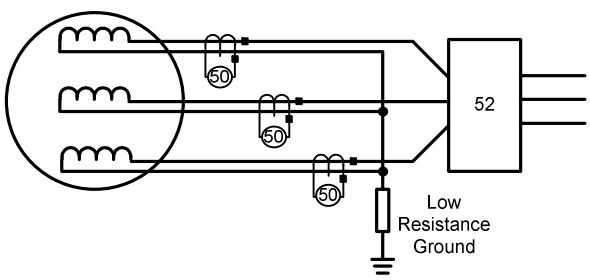

Fig. 4. Self-Balancing Protection Scheme

III. Turn-to-Turn Fault Protection

A. Basic Split-Phase Relay Scheme

Phase differential protection (87) will not detect a turn-to-turn fault occurring on the same phase unless the fault develops into a phase-to-phase or phase-to-ground fault over time, which will eventually trigger the operation of phase differential (87) or ground protection (59G), respectively. But by the time 87 or 59G element operates, it may be too late, as severe stator damage would have already occurred.

The split-phase relay scheme can detect turn-to-turn faults, but it requires that the stator windings split into two equal groups per phase, as shown in Fig. 5. Most low-speed hydroelectric generators in North America are constructed with two or more circuits per phase, each circuit having multiturn coils. When a coil is short circuited, as shown in Fig. 5, a voltage unbalance occurs, which in turn causes circulating current to flow between the windings of the faulted phase. It is typical to install an individual overcurrent relay with instantaneous and very-inverse characteristics per each phase to detect the circulating current.

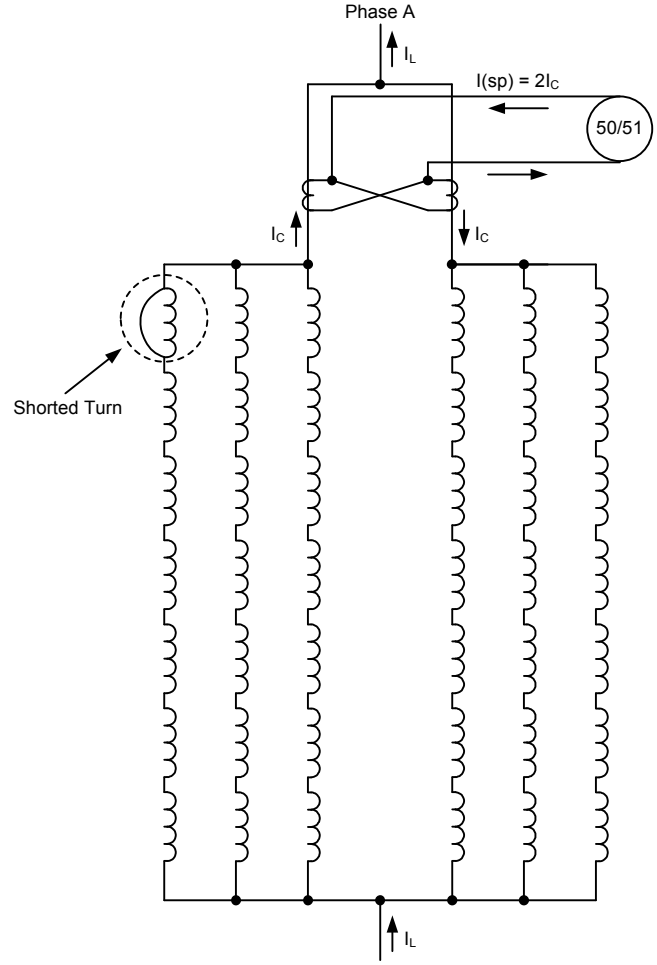

Fig. 5. Split-Phase Current Due to Shorted Turn on Phase A

Fig. 6 illustrates the split relay scheme using six separate bushing-type CTs. Each phase consists of two differentially connected CTs, with their output terminals connected to a single overcurrent relay. The purpose of the overcurrent relay is to measure a difference of the currents, I_1 and I_2. This scheme, however, may not provide the desired sensitive settings because there may exist higher-than-normal unbalanced current under normal operating condition because of unequal CT characteristics between the two CTs.

CT error currents that are expected with the arrangement shown in Fig. 6 are eliminated by using single or double window CTs, as shown in Fig. 7 and Fig. 8. The elimination of CT errors allows a more sensitive setting on the instantaneous relay. The single window CT in Fig. 7 is usually limited to small generators because of the size of the window, which requires smaller conductor cables. The double window CT in Fig. 8 is used for larger generators.

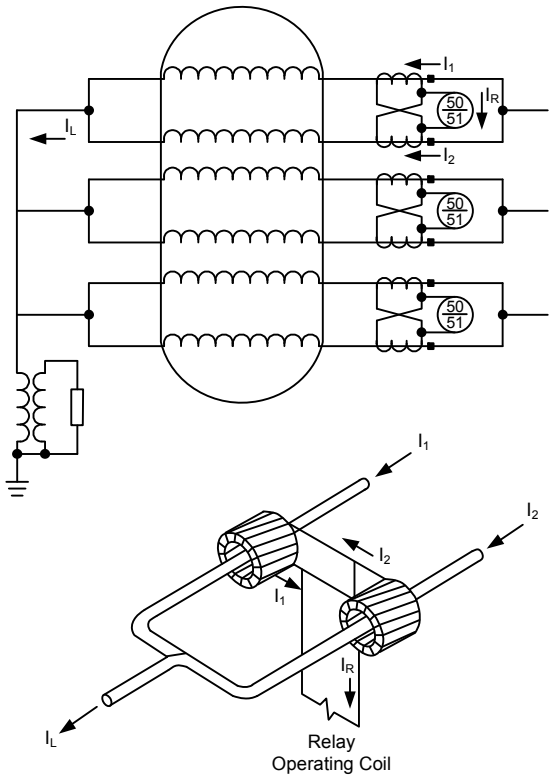

Fig. 6. Split-Phase Protection Using Separate CTs [2]

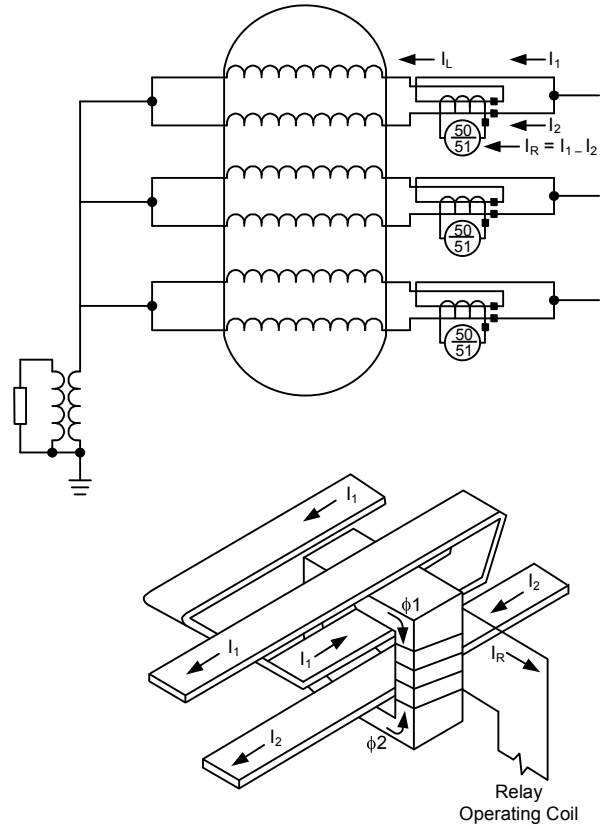

Fig. 7. Split-Phase Protection Using Single Window CTs [2]

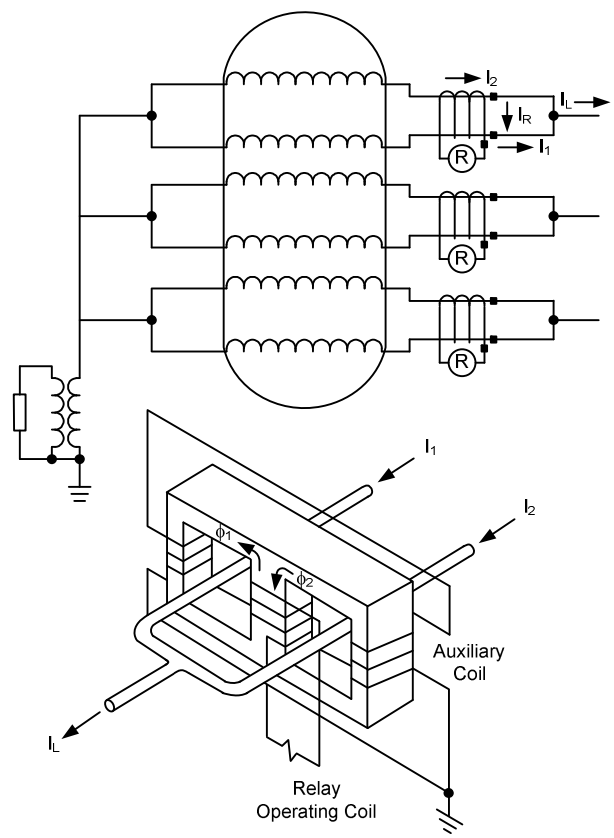

Fig. 8. Split-Phase Protection Using Double-Primary, Single-Secondary CTs [2]

B. Split-Phase Current Variations and Measurements

Ideally under normal conditions, no circulating currents should exist in the parallel windings. But in reality, there always exists a certain amount of circulating current that flows in the parallel windings because of the following factors:

- imperfection in the generator construction
- temperature variations
- winding connections
- external faults
- terminal voltage and load variations

All of these factors make it difficult to determine proper settings values. To apply proper split-phase settings values, normal circulating currents need to be measured by field tests and regularly checked, because normal circulating currents are continuously varying over time, changing from season to season or over day and night due to temperature variations. The following should be considered when split-phase current is measured in the field:

- Split-phase current naturally exists in the stator windings. Measurement of the highest split-phase current is usually found at maximum operating voltage and current but can also occur when there is no-load current with high voltage.
- The generator manufacturer should provide data on the value of minimum split-phase current for a single shorted turn, which is typically 4 percent of generator full load current. The minimum split-phase current occurring during a single shorted turn can be assumed to be twice the split-phase current, I_{sp}, which occurs during the normal condition.
- A staged, three-phase fault test should be conducted at reduced voltage to determine the maximum split-phase current under external fault condition. The prediction of the split-phase current can thus be determined through linear extrapolation to full load voltage.

C. Settings

In general, the relay should be set above any normal unbalanced current but below the unbalance caused by a single shorted turn. Sometimes under emergency conditions, the generator is allowed to operate with a cutout coil, but the amount of cutout coil should be limited to 10 percent of the winding. The time delay for the protection should be set to prevent operation that may occur during external faults caused by unequal CT response to the transient. The instantaneous unit must also be set above the transient level expected during external faults and consequently will likely detect multiturn and phase-to-phase faults only.

1) Time Element

The minimum pickup current setting for the time element should be selected at 1.5 times the magnitude of the maximum split-phase current measured under the normal operating condition, $I_{min} = 1.5 \bullet I_{sp}$. If the normal split-phase currents from all three phases are reasonably close to one another, the same setting can be applied for all three relays. This setting value should be based on the highest measured I_{sp}. However, if the split-phase current of one (or two) phase(s) is unusually high compared with the other phases, individual phase settings need to be applied. In this case, three independent relay elements are required for split-phase protection.

The time dial setting should be chosen so that the relay will operate in approximately 0.5 seconds at two times I_{min}. This is a reasonable choice, as the split-phase current can go up to four times I_{sp} during external fault conditions.

2) Instantaneous Element

An instantaneous pickup setting should be chosen approximately at $I_{inst} = 7 \bullet I_{min}$, which is based on a subtransient fault current, $I'' = 1/X''g$ pu, during which time the split-phase current may reach up to five to seven times I_{min}. The setting is set high so that the instantaneous overcurrent element does not react to external faults during the subtransient period. It also provides backup protection to generator differential protection.

3) Trip

The split-phase protection, if operated, initiates a complete shutdown of the generator and locks out. The lockout feature is needed for further inspection of damage to the windings before the generator is brought back to service. A turn-to-turn fault can cause a fire, for which a deluge operation is required. The deluge should operate only if such fire detecting apparatus as HAD (heat activating device) is triggered. It will also initiate the closure of louvers to starve oxygen in the generator chamber.

D. Turn-to-Turn Stator Fault Detection Using Unbalanced Overvoltage (59N)

For generators whose stator winding is not split for the application of a split-phase current differential scheme, a neutral unbalanced voltage detection method may be used, as shown in Fig. 9. The scheme requires a single-phase voltage relay connected to an "open corner delta" of the VT (voltage transformer) secondary side. However, the primary-side VTs are connected in wye, with the neutral connection point tied to the generator neutral instead of station ground. The connection of the wye neutral point to the generator neutral will make the 59N relay insensitive to a stator ground fault. The relay, however, will operate for a turn-to-turn fault, which will cause the unbalanced voltage to go above and beyond the normal level of the unbalance that normally exists across the open corner delta.

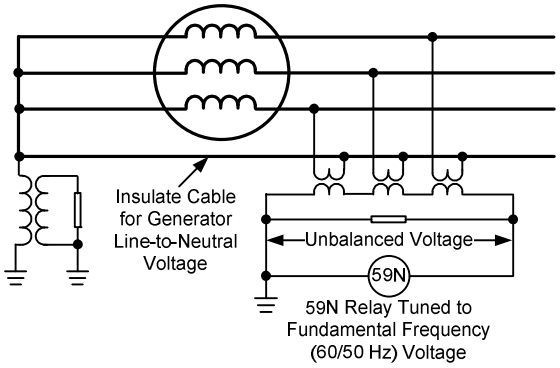

Fig. 9. Turn-to-Turn Stator Winding Fault Protection, Zero-Sequence Overvoltage Method (59N) [2]

The installation requires a cable lead from the generator neutral to the VT neutral because the VTs are located at the generator terminal. In addition, the cable insulation should be rated for the system line-to-ground voltage. One drawback of this scheme is a solid generator ground if the line-to-neutral insulated cable that connects the VT neutral to the generator neutral sustains a ground fault. For this reason, periodic testing of the cable is recommended.

The 59N relay is tuned to fundamental frequency (60/50 Hz) voltage because some third-harmonic voltages will be present across the broken-delta VT input.

Note that this scheme is more widely accepted outside the United States.

IV. Backup Protection

The most common type of backup protection used for unit-connected generator stator phase faults is the overall differential relay. For smaller units or units connected directly to a bus, system backup and negative-sequence relays, discussed in a separate section of the tutorial, are used. Also, an impedance relay is sometimes used to provide backup protection for the generator step-up (GSU) transformer and generator.

A. Overall Differential Protection

The overall differential provides backup protection for both the generator and step-up transformer, as shown in Fig. 10. A harmonically restrained transformer differential relay is applied. The generator auxiliary transformer may also be included in the differential zone as shown. The high CT ratio required on the low-voltage side of the auxiliary transformer to balance the differential circuit currents may require the use of an auxiliary CT. It is usually preferable to include the auxiliary transformer inside the overall differential if possible. The CTs on the high side of the auxiliary transformer that feed the auxiliary transformer differential circuit may severely saturate for high-side faults because of the extremely high fault current at that point. Saturation could be so severe that the differential relay might fail to operate, resulting in a failure to trip. The overall differential connected to the auxiliary transformer low-voltage side would detect the fault and provide backup tripping.

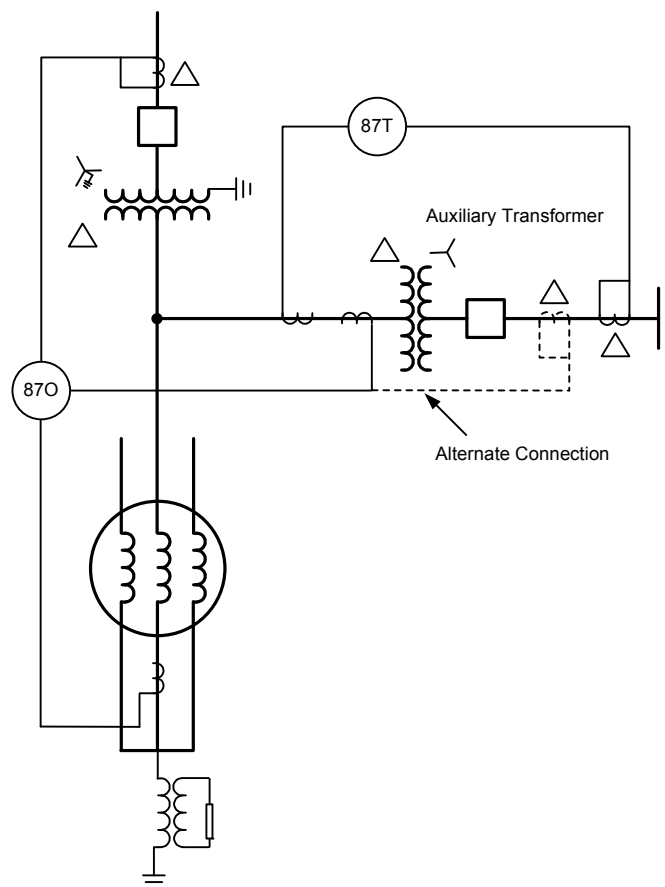

Fig. 10. Generator Phase Fault Backup Overall Differential Scheme

When applying overall differential protection to a cross-compound generator, it is acceptable to parallel CTs in the neutral side of the generator or connect them to separate windings of a multiwinding differential relay.

B. Impedance Protection

Impedance protection can provide backup protection for phase-to-phase and three-phase faults on the stator or isolated phase bus outside of the generator differential zone. Impedance protection is preferable to overcurrent protection because the sustained fault current may be less than the load value. The element may have an impedance characteristic centered at the origin or have an offset mho characteristic. It may be connected to the generator neutral CTs, in which case the reach should be set to cover a portion (50 percent) of the GSU transformer impedance with little or no intentional time delay. Alternately, the element may be connected to a CT at the generator terminals or on the high-voltage side of a GSU transformer looking back toward the generator. If connected at the high-voltage side of a GSU transformer, then it also provides protection for faults in the GSU transformer. In this case, the element will not operate if the generator is offline.

V. Reference

[1] *IEEE Guide for the Application of Current Transformers Used for Protective Relaying Purposes*, IEEE Standard C37.110-2007.

[2] *IEEE Guide for AC Generator Protection*, IEEE Standard C37.102-2006.