System Backup Protection

Demetrios Tziouvaras, Quintin Verzosa, Jr., and Thomas E. Wiedman

***Abstract*—System backup protection is commonly applied to protect generators from supplying prolonged fault currents to external faults in the power system when protective equipment fails. It consists of time-delayed relaying to detect phase and ground faults external to the generator protection zone. This section of the tutorial covers the basic types of system backup protection that are widely used for synchronous generators and discusses the types of protective relays used, their purpose and setting considerations, as well as the consequences of not installing backup protection.**

I. Introduction

System backup protection for generators consists of time-delayed protection for phase-to-ground and multiphase fault conditions. Backup generator protection schemes protect against failure of the system protection relaying and subsequent long clearing system faults. Relay settings for backup relaying must be sensitive enough to detect low fault current conditions. The settings must balance the opposing requirements for sensitivity to detect distant faults and the security to prevent unnecessary generator tripping.

Fig. 1 shows the basic types of backup protection used on unit generator-transformer arrangements, and Fig. 2 shows the basic relay types for synchronous generators connected directly to the power system. Backup protection is generally divided into phase fault backup protection and ground fault backup protection. Phase fault protection is provided by a distance (21) relay or an overcurrent (51V) relay that is either controlled or restrained by voltage. Overcurrent relays (51G) provide ground fault protection. In addition, the negative-sequence (46) relay, described in Chapter 3.4, provides protection for unbalanced phase and ground faults but not for balanced three-phase faults.

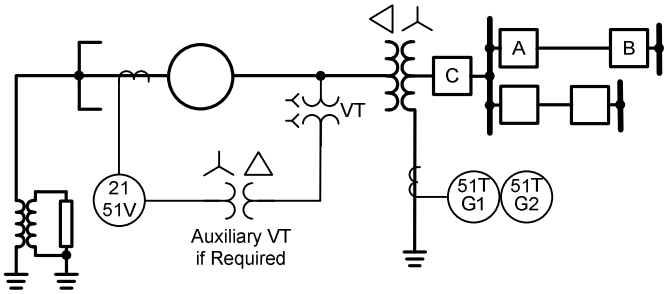

Fig. 1. Application of System Backup Relays for a Unit Generator-Transformer Arrangement

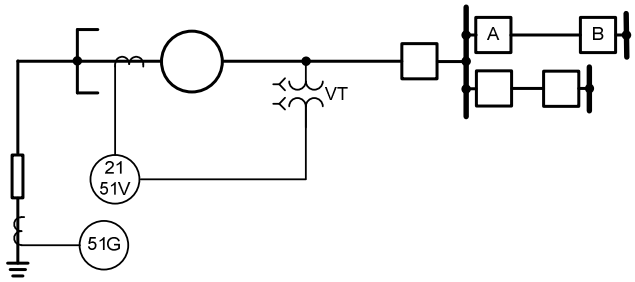

Fig. 2. Application of System Backup Relays for a Generator Connected Directly to a Power System

II. Phase Fault Protection

Two types of relays are commonly used for system phase fault backup protection—distance type relays or voltage-controlled (or voltage-restrained) overcurrent relays. System backup protection is time-delayed and coordinated with transmission line protection. The relay type selected for any application is usually a function of the type of relaying used on the lines that are connected to the generator (i.e., overcurrent protection for lines that are protected by overcurrent relays and distance protection for lines that are protected by phase distance relays). Overcurrent backup relays are difficult to coordinate with line distance relays because of the variability in trip time for overcurrent relays for different system conditions.

As shown in Fig. 1 and Fig. 2, CTs (current transformers) for phase fault protection are normally connected to the neutral side of the generator to provide additional backup protection for the generator.

The distance relay may be supervised by an instantaneous overcurrent relay to prevent false operation for a loss-of-potential condition. The voltage-restrained overcurrent relay may be supervised by a voltage balance relay to prevent false tripping for loss of voltage. A voltage balance relay that compares the voltage output of two sets of VTs (voltage transformers) connected at the generator terminals provides the desired supervision. Digital relays may have a loss-of-potential detection function that blocks distance element operation. See Chapter 3.7 for a detailed discussion of VT signal loss considerations.

When the backup phase fault protection is connected to the CTs on the neutral terminals of the generator, it also provides backup protection for the zone between the generator and the synchronizing breaker before the generator is synchronized to the system. The generator fault currents can decay quickly during low-voltage conditions created by a close-in fault [1]. In these applications, the fault current decrement curve for the

generator/exciter should be reviewed carefully for time constants and currents. See Chapter 1 for more details.

A. Overcurrent Phase Backup Protection

The simplest type of overcurrent phase backup protection is the overcurrent relay. This relay must be set above load and have a long enough time delay to ride through generator swings and coordinate with other system backup protection. At the same time, it must be set low enough to trip for remote phase faults for various system conditions. The settings must be reviewed to ensure that the relay will not operate during system emergency conditions where generator terminal voltage is depressed and stator load currents may be higher than the normal generator rating. In most cases, reliable settings criteria cannot be met on a realistic system. A utility survey of generator backup protection practices found minimal applications of overcurrent backup protection [2].

The pickup setting of an overcurrent relay would normally be 1.5 to 2.0 times the maximum rated current for the generator to prevent false trips during some emergency overload conditions. Because the generator fault current decays to near-rated full load current as determined by synchronous reactance and the generator time constant, the relay setting will be too high to pick up for long duration faults. Only in a small number of applications will the system coordination requirements and the generator time constants allow a reliable setting for a simple overcurrent backup. For the previously cited reasons, the use of simple overcurrent generator backup protection is not recommended.

Therefore, when phase overcurrent backup relays are applied, they are either voltage-controlled or voltage-restrained. Voltage supervision allows both types of relays to remain in a picked-up state and time out as the current decays with time because of the current decrement characteristic of the generator. The voltage supervision prevents them from operating under emergency overload conditions.

The voltage-controlled overcurrent relay consists of a sensitive low pickup time-overcurrent element that is supervised or torque-controlled by a voltage element. The voltage element is picked up and disables the overcurrent element from tripping during normal and emergency overload conditions. Under fault conditions where the voltage drops below a set level, the voltage element will drop out, permitting the overcurrent element to operate.

The voltage-restrained overcurrent relay, on the other hand, consists of an overcurrent element whose pickup level varies as a function of the voltage applied to the relay. Fig. 3(a) shows a typical characteristic of a modern voltage-restrained overcurrent relay. During nonfaulted conditions, the generator terminal voltage is above the voltage setting, Vs1, and the current pickup setting is Is. When a close-in fault occurs, the voltage can drop below the voltage setting, Vs2, and the current pickup level is reduced by the factor *k* to kIs. For voltages between Vs1 and Vs2, the pickup level varies proportionately between Is and kIs. Fig. 3(b) shows a characteristic of an electromechanical voltage-restrained overcurrent relay.

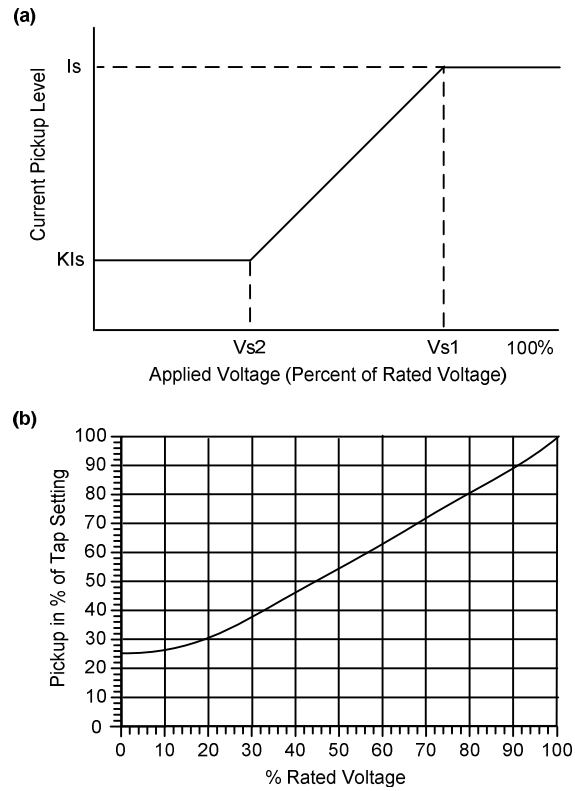

Fig. 3. Voltage-Restrained Overcurrent Relay Characteristic

If set properly, the overcurrent pickup levels in both types of relays will be below the generator fault current level as determined by the synchronous reactance.

The 51V voltage element setting should be calculated such that under extreme emergency conditions (with lowest expected system voltage), the 51V relay will not misoperate.

The generator current for a three-phase fault is lowest for an unloaded generator with the regulator out of service. This is the worst case condition used for setting the minimum overcurrent element pickup for these two types of relays. For a voltage-controlled relay, the overcurrent element pickup setting should be 30 to 40 percent of full load current. Because the tripping times of the backup overcurrent relays are delayed about 0.5 second or more, the generator currents are calculated using the unsaturated synchronous reactance of the generator. With the regulator out of service and only minimal auxiliary load, a typical value for the voltage behind the synchronous reactance is approximately 1.2 pu. Given a typical synchronous impedance of 1.5 pu and a step-up transformer impedance of 0.1 pu, the maximum steady-state current will be 0.75 pu without field forcing. Field forcing is an exciter function that boosts field current beyond its normal output for a short period during fault conditions.

These settings do not normally allow the backup relaying to protect for faults on the auxiliary bus because of the large impedance of the station service transformer. Some system faults result in voltage drops at the generator terminals but with fault current that is below 0.75 pu pickup level. A voltage-controlled overcurrent relay is preferred in this case

because the pickup level can usually be set lower than the voltage-restrained relay.

Time-delay settings must be coordinated with transmission system primary and backup protection, including breaker failure time, to allow for selectivity. Coordination is usually calculated with zero voltage restraint. This is a conservative approach because, in reality, some voltage restraint is present and will improve the coordination.

Some generator exciter systems use only the VT connected to the generator terminals as input to the field excitation. In this case, the generator fault current may decay rapidly when there is low voltage at the generator terminals because of a fault. Consequently, the overcurrent phase fault backup may not operate for system faults. Therefore, the performance of these relays should be checked with the fault current decrement curve for a particular generator and VT static connected excitation system.

To provide complete multiphase backup system protection, three voltage-controlled or voltage-restrained time-overcurrent relays are used. In some smaller and medium size generator applications, a single overcurrent (51V) relay is used if a negative-sequence overcurrent (46) relay is included. The two relays together provide backup protection for all types of external multiphase faults. If the generator is connected through a delta-wye step-up transformer, as shown in Fig. 1, certain voltage-restrained relays require auxiliary transformers that shift the relay voltage phase angle to match the system voltages in order that system faults are detected correctly. See the following discussion that applies to distance phase backup protection.

B. Distance Phase Backup Protection

The second type of backup phase protection is the distance relay. A utility survey of generator backup protection practices shows that the distance relay is by far the most common type of phase system backup protection [2]. Typically one or two zones of distance relaying with a mho characteristic is applied. If the generator is connected to the system using some means other than a delta-wye step-up transformer (e.g., direct connection or wye-wye transformer) where there is no phase shift, the standard CT and VT connections for a mho distance relay will provide accurate impedance measurements for system faults (neglecting infeed).

If the generator is connected through a delta-wye step-up transformer, certain relays require auxiliary transformers that shift the relay voltage phase angle to match the system voltages in order that system faults are detected correctly, as shown in Fig. 1. The turns ratio of the auxiliary VT is chosen so that the line-to-line voltages on either side of the auxiliary VTs have a ratio of 1:1. Relays that measure impedance based on the compensator distance element principle and some models of digital distance relays that have a setting to provide the phase shift within the relay do not require an auxiliary VT.

When the distance relay is connected as shown in Fig. 1 or Fig. 2, the relay not only provides backup protection for system faults but also provides some backup protection for phase faults in the generator and generator zone before and after the generator is synchronized to the system. In some cases, the distance relay is connected looking toward the system, receiving both current and voltage from CTs and VTs connected to the terminals of the generator. In addition to its normal system backup protection function, the offset mho characteristic is used to provide some backup phase fault protection in the generator and generator zone when the generator is connected to the system. However, this connection will not provide backup generator protection when the generator is disconnected from the system, because there will be no fault current through the CTs.

The distance relay application requires a setting that detects a line fault in the event of protection equipment failure. The relay impedance reach and time delay must be coordinated with system primary and backup protection, including breaker failure time, to allow selectivity. In addition, the setting must remain conservatively above the machine rating to prevent inadvertent trips on generator swings and severe voltage disturbances.

In many cases, a number of generators and lines are connected to the generating station, as shown in Fig. 4. The impedance relay for each generator requires sensitive settings to detect faults at the ends of long lines in the presence of other sources. Sensitive settings may cause the backup relays to unnecessarily trip a generator under some loading conditions or for minor, stable swings. With this type of system configuration, it is generally possible to set these backup relays to detect only close-in faults. Redundant line relaying and breaker failure relaying are necessary for line, bus, and transformer protection.

These system configurations generally require settings criteria that include compromises in the desired protection to maintain generator security. See [3] and [4] for guidance in setting the backup (21) relays.

Set the impedance relay to the smallest of the three following criteria:

- 120 percent of longest line (with infeed). If the unit is connected to a breaker-and-a-half bus, this percent is calculated using the length of the adjacent line.
- 50 to 66.7 percent of load impedance (200 to 150 percent of the generator capability curve) at the machine-rated power factor.
- 80 to 90 percent of load impedance (125 to 111 percent of the generator capability curve) at the relay maximum torque angle (MTA).

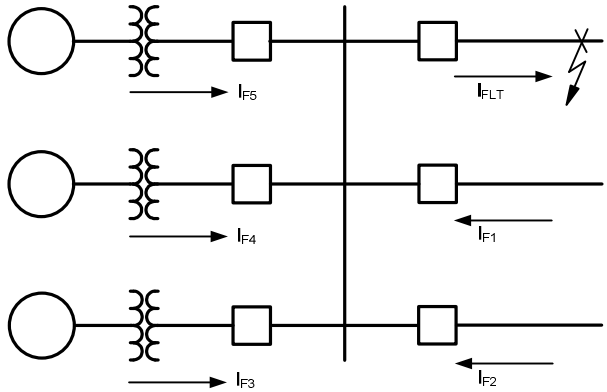

Fig. 4. Complex System Configuration With Infeeds

When equipped with modern excitation control and protection systems, generators can operate within short time capabilities to provide system var support during recoverable power swings. A setting value above 200 percent of the capability curve may be required. This may limit the reach even further or may require a much longer time delay.

Because of recent blackouts caused by voltage collapse, the distance setting should be checked for proper operating margins when the generator is subjected to the lowest expected system voltage. The North American Electric Reliability Corporation (NERC) has established a system voltage level of 0.85 pu as the lowest voltage at which protection must operate properly.

These criteria normally require compromises in the desired protection to maintain generator security. It is recommended that these relay settings be evaluated between the generator protection and the system protection engineers to optimize coordination while still protecting the turbine generator. Stability studies may be needed to determine a secure set point and time delay to optimize protection and coordination.

Digital multifunction generator protection relays make it possible to use two zones of distance protection. In this case, Zone 2 is set as previously described. When two zones are applied for phase fault backup protection, Zone 1 with time delay can be set to provide backup protection for faults in the local switchyard. The Zone 1 timer is set to the normal Zone 2 time-delay criterion to coordinate with high-speed line protection plus the breaker failure time. The reach is typically set to see the generating station high-voltage bus (120 percent of the GSU [generator step-up] transformer impedance). This setting should be checked for coordination with the Zone 1 element of the shortest line emanating from the bus. If the Zone 1 setting, based on 120 percent of the GSU transformer impedance, overreaches the shortest line Zone 1 reach, the system backup Zone 1 reach will need to be reduced to about 80 percent of the shortest line Zone 1 setting (infeed neglected).

Alternatively, Zone 1 is used to provide high-speed protection for phase faults in the generator isolated-phase bus. For this application, the Zone 1 element is set to 50 percent of the GSU transformer impedance with no intentional time delay. The Zone 1 element provides redundant high-speed phase fault protection for the generator terminal and the isolated-phase bus (which is otherwise protected only by the overall generator-transformer differential relay) while the Zone 2 element provides system backup protection for phase faults. Note that this high-speed element can operate on an out-of-step or severe power swing condition, which is un desirable, and in addition provide misleading target information.

When performing calculations that involve impedances with different voltage bases, the impedances should first be converted or referred to a common voltage base, usually the generator voltage. Alternatively, calculation errors are more easily avoided by working in the per-unit system. The calculated per-unit reach can then be converted to secondary ohms to set the relay.

Fig. 5 shows an application of a two-zone distance relay where Zone 1 is set to cover 120 percent of the GSU impedance and Zone 2 is limited by the GCC (generator capability curve) at 67 percent of the GCC at the rated power factor angle (RPFA). Here the Zone 2 reach will not provide adequate phase fault system backup protection as it would require an extremely large setting. The only way to ensure adequate protection to avoid sustained currents to the fault is to provide redundant transmission system protection and breaker failure protection.

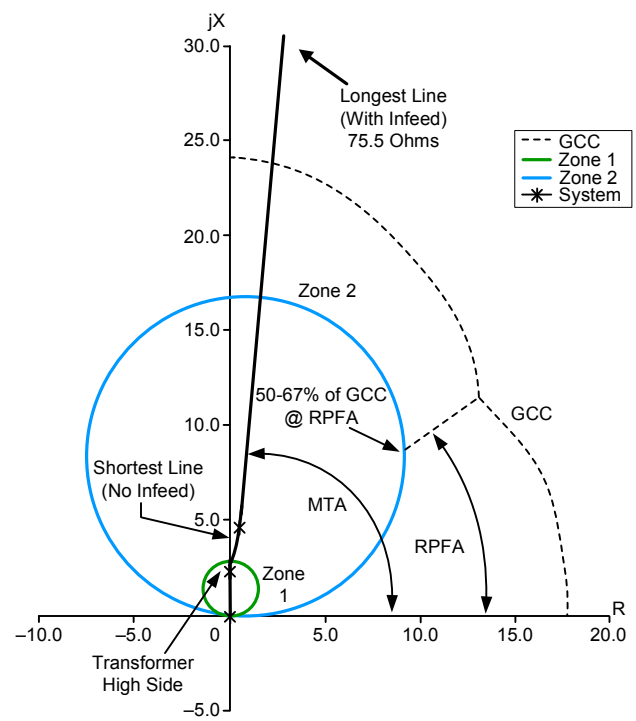

Fig. 5. Distance Relay Setting Example Plotted on an R-X Diagram [4]

Other beneficial features of modern digital protection that can help improve the security of the distance backup protection include power swing blocking, load encroachment, and shaped characteristics. The power swing blocking function is used to block selected zones and allow them to have a longer reach and still prevent inadvertent tripping during severe but recoverable power swings. The two other

features are used to restrict the distance relay resistive and reactive reaches independently.

III. Backup Ground Protection

When a generator is connected in a unit generator-transformer arrangement, it is generally desirable to connect an inverse or very inverse overcurrent ground relay (51TG1) and, optionally, a second overcurrent relay (51TG2) to a high-accuracy current transformer in the GSU transformer high-side neutral, as shown in Fig. 1. When the generator is connected directly to the system, a time-overcurrent ground (51G) backup relay is connected to a CT in the generator neutral, as shown in Fig. 2.

Backup ground protection is set to pick up for ground faults at the end of all lines out of the station and is set to coordinate with the slowest ground fault protection on the system. For lines protected by overreaching ground distance relays, the backup relay time-coordinates with the ground distance timer plus the breaker failure relaying time delay. Any high-resistance ground fault outside the reach of the transmission line ground distance relays seen by the backup ground relays could cause undesirable tripping of multiple generator units. Even when ground distance relays are used, an inverse or very inverse time-overcurrent element for transmission line ground fault protection is recommended to cover high-resistance faults and also prevent possible miscoordination.

Backup relays 51TG1 and 51G are generally connected to shutdown the generator. However, if the "unit separation tripping scheme" (see Chapter 5.1) is used, 51TG1 trips only the high-side generator breakers and 51TG2 is required to shut down the generator should the high-side breaker fail to open. 51TG2 is set to coordinate with 51TG1.

If a ground fault occurs between the GSU transformer high-voltage wye-connected winding and the high-side generator breaker, 51TG2 will operate but will be very slow and practically provide no protection if the fault is in the transformer. A restricted ground fault differential relay connected to the transformer neutral CT and the phase CTs covering the generator breaker is recommended to provide sensitive protection and high-speed tripping and shut down the generator.

IV. System Backup With Generator Negative-Sequence Relaying

The negative-sequence relay is covered in detail in Chapter 5.4. This section will emphasize the relay characteristics as they apply to system backup protection. The negative-sequence relay is set to protect the generator based on rated current capabilities from IEEE Standards C50.12 and C50.13. It is desirable to set the relay to protect for system series unbalance, which requires the use of a sensitive relay. A low setting allows the negative-sequence relay to protect the generator for open conductor conditions that may not be detected by any other relay protection. Most often, digital and some electronic negative-sequence relays are capable of the sensitive setting, while electromechanical relays do not provide this sensitivity.

The most recent survey on backup protection showed minimal operations of the negative-sequence overcurrent relays for faults on the power system [2]. This validates the idea that setting the negative-sequence relays at the generator capability down to continuous ratings still leaves a large coordination margin between the tripping times of system fault protection and the generator negative-sequence protection. On the other hand, generator negative-sequence relays may not be good backups for system faults because of additional equipment damage caused by long tripping time before the fault is cleared and subsequent generator instability for the extended fault clearing times. As pointed out before, the negative-sequence relay does not protect for balanced three-phase faults.

V. Tripping Mode

A. Phase Faults

The 21 and 51V phase relays provide generator backup protection for phase faults. These relays are connected to energize a hand-reset lockout relay that trips the main generator breaker(s), the generator field and/or exciter breakers, the low-side breakers on the UATs (unit auxiliary transformers), and the prime mover. These functions should not be used together; only one or the other is applicable to a particular system. Refer to Chapter 5.1 for more details about tripping modes.

B. Ground Faults

The backup for the ground fault relay 51TG1 for unit generator-transformer arrangement in Fig. 1 and 51G for direct-connected generator arrangement in Fig. 2 provide backup protection on the transmission lines connected to the station bus. These relays will generally be connected to shut down the generator in the same manner as described for the phase relays 21 and 51V.

In some cases, when the "unit separation scheme" is used, 51TG1 is connected to trip the GSU transformer high-side breaker(s) only and will thus disconnect the generator to leave it isolated on its station service whenever a transmission line ground fault is not cleared by primary protection. If the high-side generator breaker fails to open, 51TG2 will trip the lockout relay to shut down the generator.

VI. Consequences of No System Backup and Incorrect Application

As stated at the beginning of this chapter, there are tradeoffs in the application of system backup protection. The most recent survey of the industry on this topic outlined both the risks in security and sensitivity. In this survey, a total of 46 backup protection operations were reported by the respondents. Out of this total, there were 26 correct operations and 19 incorrect operations [2].

The backup ground protection had the fewest misoperations. The phase and negative-sequence operations

were nearly evenly split between correct and incorrect. Of these misoperations, nine were faulty or maladjusted relays, three were wiring errors, three were incorrect settings, three were open potential circuits, and one was personnel error. These misoperations emphasize the need for careful application and implementation of the backup protection. It also underlines the fact that these relay schemes are secure when applied and implemented correctly.

The survey also outlined three events that occurred as a result of not having backup relays. Two resulted in a fire that burned up six cubicles as a result of a failed breaker. The third reported generator damage as a result of one hour of operation with one pole of the high-side breaker open. One other incident reported to the authors indicated that a lack of backup protection resulted in damage of two generator rotors. The rotor damage occurred because of a long time clearing ground fault, resulting from a 230 kV breaker failure operation and lack of negative-sequence electromechanical relay sensitivity.

More recently, investigation of generator trips during the North American disturbance on August 14, 2003, indicated that 290 units, about 52,745 MW, tripped because of thirteen types of generator protection functions. The information is summarized in Table I [5].

TABLE I
2003 BLACKOUT GENERATION PROTECTION TRIPS

Function Type	Number of Units
21	8
24	1
27	35
32	8
40	13
46	5
50/27	7
50 BF	1
51V	20
59	26
78	7
81	59
87T	4
Unknown	96
TOTAL	290

Unfortunately, information is not available that directly addresses which of those generator trips were appropriate for the bulk electric system conditions, and which were nuisance trips. However, some undesired generator trips by these protective functions did contribute to expanding the extent of the blackout.

NERC is examining requirements for ensuring coordination of system backup protection with the transmission system and has created a technical reference document that explores generating plant protection schemes and their settings to provide guidance for coordination with transmission protection, control systems, and system conditions to minimize unnecessary trips of generation during system disturbances [5].

VII. CONCLUSIONS

The application of system backup protection at generating plants involves the careful consideration of tradeoffs between sensitivity and security. The risks in applying backup protection can be minimized by careful consideration of the points discussed in this chapter of the tutorial. These risks are far outweighed by the consequences of not having proper backup protection.

VIII. REFERENCES

[1] T. Higgins, Jr., H. Holley, and L. Wall, "Generator Representation and Characteristics for Three Phase Faults," proceedings of the 43rd Annual Protective Relaying Conference, Atlanta, GA, May 1989.

[2] G. D. Rockefeller, A. N. Darlington, W. A. Elmore, R. J. Fernandez, J. R. Gil-Berlinches, R. W. Haas, L. E. Landoll, W. J. Marsh, G. R. Nail, A. C. Pierce, C. L. Wagner, and L. S. Wright, "A Survey of Generator Back-Up Protection Practices: IEEE Committee Report," *IEEE Transactions on Power Delivery*, vol. 5, issue 2, pp. 575–584, Apr. 1990.

[3] *IEEE Guide for AC Generator Protection*, IEEE C37.102-2006.

[4] C. J. Mozina, M. Reichard, Z. Bukhala, S. Conrad, T. Crawley, J. Gardell, R. Hamilton, I. Hasenwinkle, D. Herbst, L. Henriksen, G. Johnson, *P. Kerrigan, S. Khan, G. Kobet, P. K*umar, S. Patel, B. Nelson, D. Sevcik, M. Thompson, J. Uchiyama, S. Usman, P. Waudby, and M. Yalla, "Coordination of Generator Protection With Generator Excitation Control and Generator Capability," presented at the 2007 PES General Meeting, June 2007.

[5] NERC System Protection and Control Subcommittee, P*ower Plant and Transmission System Protection Coordination – Technical Reference Document*. North American Electric Reliability Council, December 2009. Available: http://www.nerc.com/filez/spctf.html.