Voltage Transformer Signal Loss

Christopher Ruckman, Stephen P. Conrad, and Wayne Hartmann

***Abstract*—Loss of the voltage transformer (VT) signal can occur because of a number of causes, most commonly fuse failure. Other causes may be a VT or wiring failure, an open circuit in the draw-out assembly, an open contact due to corrosion, or a blown fuse due to screwdriver short circuits during online maintenance. Such VT signal loss can cause protective relay misoperation or failure or generator voltage regulator runaway, which can lead to generator overexcitation. This portion of the tutorial identifies schemes to detect the loss-of-voltage signal. Some method of detection is required so that the affected relay tripping can be blocked and the voltage regulator transferred to manual operation.**

I. Introduction

On larger generators, two or more sets of voltage transformers (VTs) are commonly used in the generator zone of protection. The VTs are usually connected grounded wye-grounded wye, normally have secondary fuses or circuit breakers, and possibly have primary fuses. These VTs provide potential to a number of protective relays and the voltage regulator. If a fuse blows in the VT circuits, the secondary voltages applied to the relays and voltage regulator will be reduced in magnitude and shifted in phase angle. This change in voltage signal can cause misoperation of protective relays and the regulator to overexcite the generator. Typically, relay protective functions such as 21, 27, 32, 40, 50/27, 51V, 59D, 67N, 78, and 81 are impacted and normally blocked when the loss-of-potential is detected. If the affected VTs supply a regulator, control should be transferred to manual operation or to another regulator or VT, whichever is appropriate to prevent runaway.

If the overcurrent device (51V) is the only primary fault protection for the unit, it should not be blocked for loss of the voltage signal because the generator would continue to operate without its primary fault protection.

II. Failure Detection by Voltage Comparison (Voltage Balance)

Traditionally, loss of VT signal protection is provided using a voltage balance relay that compares three-phase secondary voltages across two sets of VTs. This scheme is shown in Fig. 1.

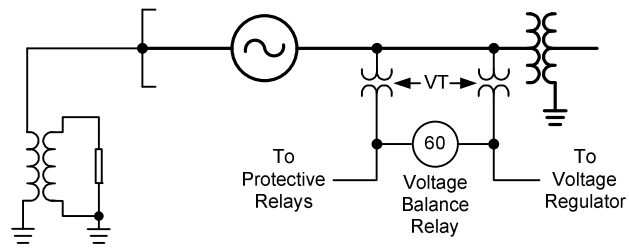

Fig. 1. Application of a Voltage Balance Relay

When a fuse blows in either VT circuit, the voltage relationship becomes unbalanced, and the relay operates. In addition to initiating the blocking and transfer action previously discussed, an alarm is also activated.

Historically, the relay has been set at a voltage unbalance of around 15 percent. When used in conjunction with older, nondigital voltage regulators, however, one potential issue concerning this setting is that corrosion or poor contact of the VT stabs can result in a voltage drop in the circuit. This drop can be significant enough to cause regulator runaway (overexcitation) but too small for detection by the relay. For these applications, a lower setting or an alternate detection scheme should be considered.

III. Failure Detection by Symmetrical Component Analysis

Modern methods of VT failure detection use the relationship between sequence voltages and currents during a loss-of-potential. When one or two VT signals are lost, the three-phase voltages become unbalanced. Because of this unbalance, a negative-sequence voltage is produced. The presence of negative-sequence voltage and the corresponding absence of negative-sequence current indicate a VT failure.

When all three VT signals are lost, the above method cannot be used successfully. Instead, a comparison can be made between the three-phase voltages and three-phase currents. If all three-phase voltages are abnormal (less than 5 percent nominal), the three-phase currents are normal (less than 125 percent nominal), and positive-sequence current is present, a VT failure is declared. A logical seal-in circuit is typically provided to ensure that a VT failure is not declared during a three-phase fault when the current drops below 125 percent of nominal because of generator current decrement during the fault.

These methods are easily implemented in digital microprocessor-based generator protection systems and can be applied when only one set of VTs is on the generator bus.

IV. VT Application Concerns

Two potential concerns regarding the proper application of VTs include ferroresonance and the use of current limiting resistors.

A. VT Ferroresonance and Grounding

Ferroresonance phenomena can occur when wye-wye VTs with grounded primaries are connected to an ungrounded system (see Fig. 2).

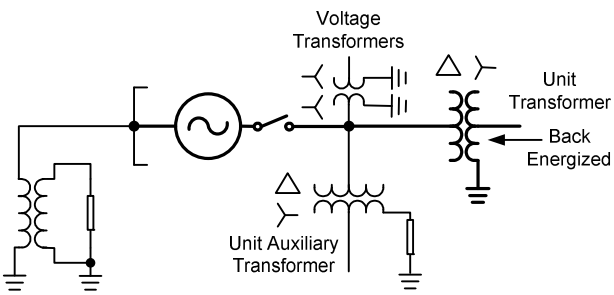

Fig. 2. Generator Zone Configuration That May Produce VT Ferroresonance

This condition can occur in the generator zone if either the generator neutral becomes disconnected or the generator is electrically disconnected from the generator bus and the VTs remain connected to the delta winding of the unit transformer. The likelihood of ferroresonance is enhanced should a higher than normal voltage be impressed across the VT windings during backfeed because of a ground fault or switching surge on the ungrounded system. The higher voltage requires the VTs to operate in the saturated region, which promotes the ferroresonance "current jump" phenomena. These high currents can cause thermal failure of the VTs in a short period of time.

By using line-to-line rated VTs connected line-to-ground, the potential for ferroresonance is reduced. To further suppress ferroresonance, it may be necessary to apply a resistive load across each phase of the secondary winding sufficient to dampen out the oscillations. This solution can be applied on a temporary basis if it is abnormal to disconnect the generator from the generator bus, but it is done for a special, temporary condition such as start up, maintenance, or testing when the generator bus will be back energized, resulting in an ungrounded system. During normal operation, these resistive loads should be removed.

If the generator bus is routinely operated in a back-energized mode with the generator disconnected from the generator bus (as is the case with a low-side generator breaker), permanent ground fault and overvoltage protection may also be applied. If the grounded wye-grounded wye VTs have an unused secondary winding, they may be connected into a broken delta configuration. By applying a damping resistance across the broken delta less than 15 percent of the per phase VT magnetizing reactance (X_m) but not so low that the VTs exceed their thermal rating, the ungrounded bus system is stable against ferroresonance. The net voltage on the idle or auxiliary VTs secondary windings is negligible until a ground fault develops on the ungrounded bus section that is backfed from the system through the unit step-up transformer delta winding. If a ground fault occurs, high voltage develops across the resistor. Because this voltage can remain for an extended time, the resistor's power dissipation rating should match the thermal capability of the VTs.

B. Using Current Limiting Resistors

Current limiting resistors are sometimes used in VT circuits supplied from isolated phase buses to ensure that current limiting fuse ratings are not exceeded by fault current levels. Several issues arise regarding the proper application of current limiting resistors. A serious exposure occurs when only one resistor is used per phase with two or more VTs applied. Fig. 3 illustrates this arrangement.

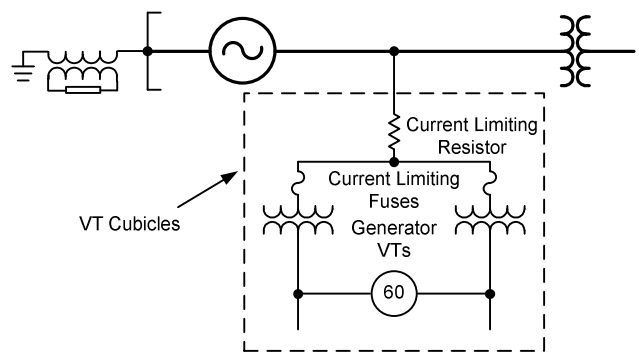

Fig. 3. One Current Limiting Resistor Per Phase (Common Resistor)

When the resistor opens or partially fails, it inserts a high resistance in the circuit. With the open resistor, both VTs are left with identical zero- or reduced-voltage signals. This condition renders the voltage balance relay inoperative and compromises the signal to the connected protection or voltage regulator.

Single-switched voltmeter schemes are impacted if connected to the afflicted phase. An operator may respond to the reduced voltage during a unit startup by inappropriately increasing the field to the point of failure. In situations where this has occurred, equipment damage has resulted.

Providing a current limiting resistor for each VT remedies this problem, thereby eliminating the common mode failure of both VT circuits. Fig. 4 shows the suggested circuit arrangement for this solution.

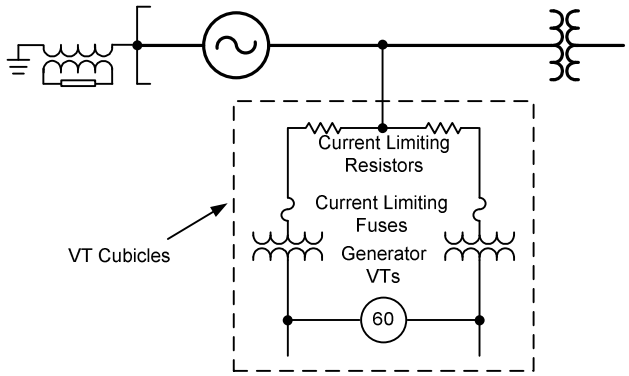

Fig. 4. One Current Limiting Resistor Per VT

When manufacturers provide this arrangement, the potential of the above mentioned conditions are minimized, and the voltage balance relay operates appropriately. Using VT loss-of-potential detection by symmetrical components successfully detects an open resistor when the common resistor arrangement is used.

V. Conclusion

Some form of loss-of-potential detection for generator voltage transformers is required. For generator protection security during this condition, it is important to block relay elements dependent upon the voltage signal. If independent loss-of-potential detection is not provided in the voltage regulator, it is important to transfer the voltage regulator from automatic to manual operation during a loss-of-potential event.

Two methods of detection have been discussed in this section of the tutorial as well as two issues that arise when applying VTs. For further background and guidance, consult [1] and other texts addressing the subject of generator protection.

VI. Reference

[1] *IEEE Guide for AC Generator Protection*, IEEE Standard C37.102-2006.