Current Unbalance (Negative-Sequence) Protection

Kevin Stephan and Murty V. V. S. Yalla

***Abstract*—A number of system conditions can cause unbalanced three-phase currents in a generator. These system conditions produce negative-sequence components of current that induce a double-frequency current in the surface of the rotor. Rotor currents that exceed the generator negative-sequence capability can cause high and dangerous temperatures in a very short time. Common practice provides protection for the generator for external unbalanced conditions that might damage the machine. This protection consists of a time-overcurrent relay that is responsive to negative-sequence current. Negative-sequence time-overcurrent relays are available with characteristics that match the negative-sequence current capabilities of the generator.**

I. Introduction

Negative-sequence relaying protects generators from excessive heating in the rotor resulting from unbalanced stator currents. From symmetrical component representation of unbalanced system conditions, currents in the generator stator can be broken down into positive-, negative-, and zero-sequence components. By definition, the magnetic field component created by the negative-sequence current component rotates in the opposite direction of the power system and rotor. Thus, the negative-sequence component of the unbalanced currents induces a double-frequency surface current in the rotor that flows through the retaining rings, slot wedges, and to a smaller degree in the field winding. Rotor currents that exceed the negative-sequence capability of the generator can cause dangerously high temperatures in a very short time.

There are a number of sources of unbalanced three-phase currents to a generator. The most common causes are system asymmetries (single-phase step-up transformers with different impedances or untransposed transmission lines), unbalanced loads, unbalanced system faults, and open circuits. The highest source of negative-sequence current is the generator phase-to-phase fault. Note that on generators with step-up transformers with delta-wye connections, a system phase-to-ground fault on the wye side of the step-up transformer is seen by the generator as a phase-to-phase fault. The generator phase-to-ground fault does not create as much negative-sequence current for the same conditions as the phase-to-phase fault. The open conductor condition produces low levels of negative-sequence current relative to the levels produced by phase-to-phase or phase-to-ground faults [1]. If undetected, the open conductor condition poses a serious threat to the generator since the negative-sequence current will produce excessive rotor heating, even at low levels of load current.

II. Negative-Sequence Generator Damage

For balanced system conditions with only positive-sequence current flowing, an air-gap flux rotates in the same direction and in synchronism with the field winding on the rotor. During unbalanced conditions, negative-sequence current is produced. The negative-sequence current component produces flux that rotates in the opposite direction from the rotor. The flux produced by this current as seen by the rotor has a frequency of twice the synchronous speed as a result of the reverse rotation combined with the positive rotation of the rotor.

The skin effect of twice the frequency of the rotor current forces the current into the surface elements of the rotor.

Fig. 1 outlines the general form of a cylindrical rotor. The coils are fastened to the rotor body by metal wedges that are forced into grooves in the rotor teeth. The ends of the coils are supported against centrifugal force by steel retaining rings that are shrink-fitted around the rotor body. Skin effect causes the double-frequency currents to concentrate at the surface of the pole faces, teeth, and rotor body for a cylindrical-rotor machine. The rotor wedges and the metallic strips below the wedges located near the surface of the rotor conduct the high-frequency current. This current flows along the surface to the retaining rings. The current then flows across the metal-to-metal contact of the retaining rings to the rotor forging and wedges. Because of the skin effect, only a very small portion of this high-frequency current flows into the field windings.

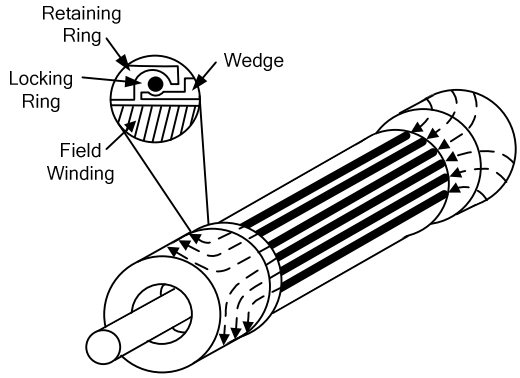

Fig. 1. Currents in the Rotor Surface

For a salient-pole machine, the double-frequency currents are also concentrated at the surface of the pole faces and teeth. Much of the current appears in the pole face amortisseur windings.

In cylindrical rotors, negative-sequence heating beyond rotor limits results in two failure modes. First, the wedges are overheated to the point where they anneal enough to rupture. Second, the heating can cause the retaining rings to expand and float free of the rotor body, which results in arcing at the shrink-fit joints. In smaller machines, the failure of the shrink-fit joints occurs first and, in larger machines, the rupture of the wedges after they have been annealed from overheating occurs first. Both failure modes will result in significant equipment downtime for repairs to the rotor body.

III. Negative-Sequence Generator Heating

Negative-sequence heating in synchronous generators is a well-defined process that produces specific limits for unbalanced operation. Except for a small heat loss in the stator, the losses due to the negative-sequence current appear in the machine rotor. The energy input to the rotor and the rotor temperature rise over an interval of time and are closely proportional to I_2^2t, where I_2 is the negative-sequence current from the stator and t is the interval of time in seconds.

The following rating method was developed based on limiting the temperature to the rotor components below the damage level. This limit is based on the following equation for a given generator:

$K = I_2^2t$

K = constant depending on generator design and size

t = time in seconds

I_2 = rms value of negative-sequence current in pu

The limiting K value is determined by placing temperature sensors on the rotor along the negative-sequence current path while negative-sequence current is supplied to the stator. This monitoring determines the limiting negative-sequence currents that the rotor can withstand. The K value is provided by the generator manufacturer for each specific unit in accordance with machine design standards such as IEEE Standard C50.13 for cylindrical-rotor machines and IEEE Standard C50.12 for salient-pole machines [2] [3].

IV. Generator Negative-Sequence Capability

The continuous unbalance current capability of a generator, as defined in [2] and [3], requires that a generator shall be capable of withstanding, without injury, the effects of a continuous phase current unbalance corresponding to a negative-sequence current I_2 of the following values (see Table I), providing that the rated kVA is not exceeded and the maximum current does not exceed 105 percent of rated current in any phase.

These values also express the negative phase-sequence current capability at reduced generator kVA capabilities as a percentage of the stator current corresponding to the reduced capability.

TABLE I
CONTINUOUS UNBALANCE CURRENT CAPABILITY

Generator Type	Permissible I_2 Stator Rating Percent
Salient Pole	
With Connected Amortisseur Windings	10
With Nonconnected Amortisseur Winding	5
Cylindrical Rotor	
Indirectly Cooled	10
Directly Cooled	
To 350 MVA	8
351–1250 MVA	8 – [(MVA-350)/300]
1251–1600 MVA	5

The short-time (unbalanced fault) negative-sequence capability of a generator is also defined in [2] and [3] and shown in Table II. Short-time values apply for 120 seconds or less. Beyond 120 seconds, the continuous capability should be used.

TABLE II
SHORT-TIME UNBALANCE CURRENT CAPABILITY

Generator Type	K Permissible I_2^2t (I_2 in pu)
Salient-Pole Generator	40
Synchronous Condenser	30
Cylindrical-Rotor Generator	
Indirectly Cooled	30
Directly Cooled	
0–800 MVA	10
801–1600 MVA	See Fig. 2

The short-time values in Table II and Fig. 2 also express the negative-sequence current capability at reduced generator kVA capabilities using per-unit stator current corresponding to the reduced capability.

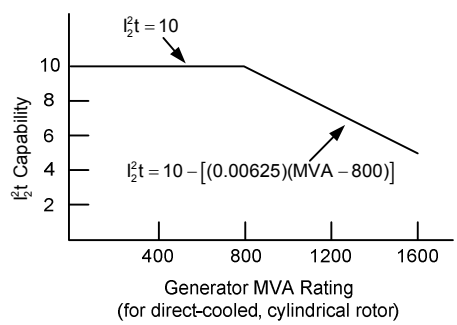

Fig. 2. Short-Time Unbalance Current Capability of Generators for a Direct-Cooled Cylindrical Rotor

The values expressed in Table I and Table II apply to generators manufactured in the year 2005 and later. Values for generators built prior to 2005 should be obtained by consulting the manufacturer or referring to older standard values in effect at the time the generator was manufactured.

V. Negative-Sequence Relay Characteristics

With the unbalance current capabilities of the generator defined by the negative-sequence current as measured at the stator, a negative-sequence time-overcurrent relay can be used to protect the generator. These relays consist of a negative-sequence segregating network supplied by the phase and/or residual components that drives a time-overcurrent relay function. The time-overcurrent characteristics are designed to match as closely as possible the generator I_2^2t characteristics. Fig. 3 shows a typical negative-sequence relay application.

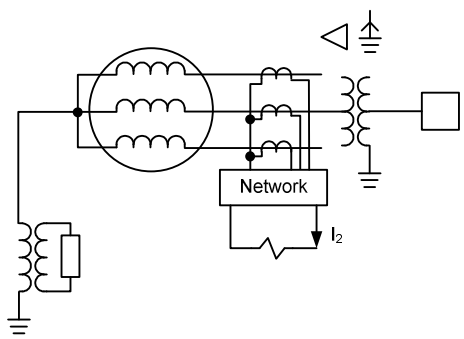

Fig. 3. Typical Negative-Sequence Time-Overcurrent Relay Application

Two types of relays are widely used: an electromechanical relay that uses a typical inverse-time characteristic and a static or digital relay that uses a characteristic that matches the I_2^2t capability curve of the generator. Fig. 4 and Fig. 5 show the typical characteristics of these relays [4]. Digital relays often do not include a maximum timing limit of 990 seconds as shown in Fig. 5.

Sensitivity is the main difference between these two types of relays. The electromechanical relay can be set to pick up at around 0.6 to 0.7 pu of full load current. The static or digital relay has a pickup range of 0.03 to 0.2. As an example, for an 800 MVA directly cooled generator with a K factor of 10, the generator could handle 0.6 pu negative-sequence current for approximately 28 seconds. Protection for negative-sequence currents below 0.6 pu would not be detected with an electromechanical relay. Given the low values of negative sequence for open-circuit unbalances as well as low-value, long-clearing faults, the static or digital relay is much better for providing coverage down to the continuous negative-sequence capability of the generator.

Since the operator can in many cases reduce negative-sequence current caused by unbalanced conditions (such as by reducing generator load), it is advantageous to provide indication when the continuous negative-sequence capability of the machine is exceeded. Some relays have alarm units (I_2 pickup range 0.03–0.2), and digital relays provide an I_2 meter to indicate the negative-sequence current level.

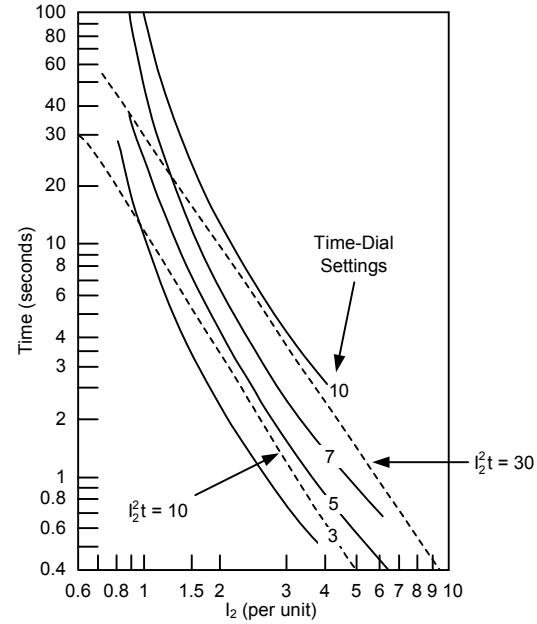

Fig. 4. Typical Time-Overcurrent Curves for an Electromechanical Negative-Sequence Relay

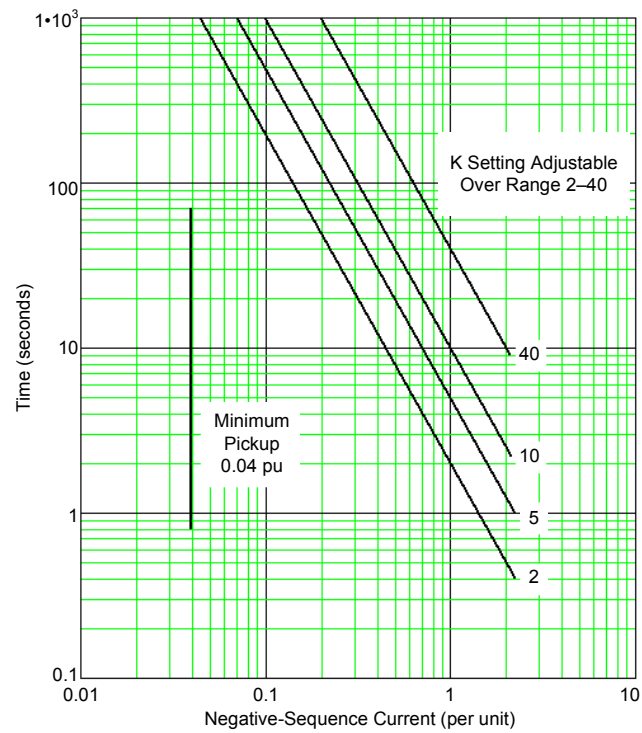

Fig. 5. Characteristics of a Static or Digital Negative-Sequence Time-Overcurrent Relay

Protection against negative-sequence harmonics from such sources as the saturation of a unit step-up transformer (from geomagnetic currents) or nonlinear system loads is not provided by standard negative-sequence relaying [5] [6]. Additional protection may be required to provide protection for negative-sequence harmonics because of the frequency dependence of negative-sequence relays.

VI. Negative-Sequence Protective Schemes

Dedicated negative-sequence relays are usually provided for generator protection. In general, backup relaying for negative-sequence is not provided. Some limited protection is provided by the phase-to-phase and phase-to-ground protection for fault conditions. For open conductor or impedance unbalance protection, the negative-sequence relay is usually the only protection. The magnitude of negative-sequence currents created by open conductor conditions and low-magnitude faults combined with the generator continuous negative-sequence ratings prevent other fault relays from providing full negative-sequence protection.

For electromechanical relays, the minimum negative-sequence current pickup can only be set around 60 percent of rated current. This provides only limited protection for series unbalance conditions such as an open phase when the electromechanical relay is used.

Static or digital relays have the capability of being set to protect generators with K values of 10 or less. An alarm setting associated with these relays provides detection for negative-sequence current down to 3 percent of machine rating. With this type of relay, the trip pickup can be set at the continuous negative-sequence capability of the generator operating at full output and provide full unbalance protection.

VII. Tripping Mode

The negative-sequence relay is often connected to trip just the main generator breaker(s) if the machine auxiliaries allow such operation. This mode allows rapid reconnection to the power system if the cause of excessive negative-sequence can be removed quickly. If the unit auxiliaries do not allow continued operation when separated from the power system, the negative-sequence relay should also trip the machine prime mover and the field breaker and should transfer the auxiliaries to a reserve or standby source.

VIII. Conclusions

Dedicated protection needs to be applied to generators to protect against destructive heating from negative-sequence unbalance currents. Electromechanical negative-sequence relaying will provide only limited protection. These relays lack the sensitivity to detect damaging negative-sequence currents resulting from open circuit unbalances as well as low-level faults. To provide full protection down to the continuous rating of the generator, static or digital negative-sequence relays must be used.

IX. References

[1] D. J. Graham, P. G. Brown, and R. L. Winchester, “Generator Protection With a New Static Negative Sequence Relay,” IEEE Transactions on Power Apparatus and Systems, vol. 94, issue 4, pp. 1208-1213, Jul. 1975.

[2] *IEEE Standard for Salient-Pole 50 Hz and 60 Hz Synchronous Generators and Generator/Motors for Hydraulic Turbine Applications Rated 5 MVA and Above*, IEEE Standard C50.12-2005.

[3] *IEEE Standard for Cylindrical-Rotor 50 Hz and 60 Hz Synchronous Generators Rotor 10 MVA and Above*, IEEE Standard C50.13-2005.

[4] *IEEE Guide for AC Generator Protection*, IEEE Standard C37.102-2006.

[5] W. B. Gish, W. E. Feero, and G. D. Rockefeller, “Rotor Heating Effects From Geomagnetic Induced Currents,” *IEEE Transactions on Power Delivery*, vol. 9, issue 2, pp. 712–719, Apr. 1994.

[6] B. Bozoki, “Protective Relaying Implication of Geomagnetic Disturbances,” Canadian Electrical Association, Power System Planning & Operations, May 1991.