Loss of Prime Mover (Antimotoring) Protection

Dale Finney and Gerald Johnson

***Abstract*—Motoring is an example of abnormal operation that can quickly damage a machine. As a consequence, IEEE guides recommend quick detection of this condition to isolate the generator from the system.**

I. Motoring

Motoring occurs when the energy supply to the prime mover is cut off while the generator is still online. When this occurs, the machine will behave as a synchronous motor, drawing enough power from the system to overcome the losses of the generator and prime mover. The chief concern associated with motoring is the potential for damage to the prime mover.

The type and severity of damage vary with machine type. In steam turbines, a loss of steam flow disrupts normal heat transfer, resulting in increased thermal stress in various parts of the turbine. Gas turbines may suffer gear damage when driven from the generator end. In hydroelectric turbines, blade cavitation on low water flow can occur during a motoring event. Motoring of a reciprocating engine could result in an explosion of unburned fuel [1].

II. Detection Methods

Various methods are used to detect a loss of prime mover, depending again on the machine type. For instance, a steam turbine may employ a temperature sensor in the exhaust hood to detect temperature buildup resulting from a loss of steam flow. Measurement of pressure differential across the high-pressure turbine element also indicates motoring [1]. However, the most generally applied method is electrical measurement of real power flow into the machine terminals. The element responsible for this measurement is the reverse-power relay (IEEE Device Number 32).

III. Application Considerations

A. Pickup Setting

Depending on the machine, the motoring losses of a turbine generator can be very low when expressed as a percentage of the machine rating. This can require a very sensitive reverse-power measurement. Table I lists typical values for various machine types. The generator manufacturer data sheet and relay manufacturer guidelines should be used to derive the pickup setting.

Table I
Motoring Power

Machine Type	Motoring Power (Percentage of Rating)
Combustion Gas Turbine	< 50%
Diesel	< 25%
Steam	0.5–3%
Hydroelectric	0.2–2%

A reverse-power element cannot detect a motoring event under some operating conditions. For instance, if the excitation system maintains a significant reactive power output during a loss of prime mover, the ratio between real and reactive power can be low. Some reverse-power relays may not accurately measure very low power levels at low power factors. If the reactive power cannot be reduced during such an event, use an alternate detection method as discussed in Section II.

B. Time Delay

The reverse-power element is always applied with a time delay. A machine can operate in a motoring condition for a maximum permissible time. This value should be obtained from the generator data sheets or by consulting with the generator manufacturer. The element's time delay must be set lower than this value. However, a transient reverse-power condition can occur during a stable power swing or poor synchronization. The time delay must be set long enough to prevent operation for these events. Given the extremely sensitive setting required for a steam turbine, a delay of 30 seconds is typical. Other prime movers such as reciprocating engines, which have a higher motoring power setting and a risk of fire or explosion if allowed to motor too long, may use a lower time delay. On such applications the reverse power relay may have a typical pickup setting of 10% with a time delay of 6 to 10 seconds.

C. Intentional Motoring

Motoring of certain machines is permitted during normal operation. These situations include some gas turbines started as synchronous motors connected to load-commutated inverter (LCI) starters and in pumped storage applications where the machine is alternately operated as a generator or motor. When operated as synchronous condensers, hydroelectric units will motor. Reverse-power element application must be inhibited during intentional motoring operation. This is accomplished by dynamically blocking the element or by disabling the element through a settings group change.

D. Tripping Mode

The reverse-power relay generally initiates a simultaneous trip. This entails disconnecting the generator from the power system, shutting down the excitation, initiating an auxiliary bus transfer, and shutting down the prime mover.

E. Sequential Tripping

If a machine is disconnected from the system while under load, the mismatch between electrical and mechanical power will result in a speed increase. The severity of the overspeed is a function of loading and machine type. Some machines, such as steam turbines, are particularly sensitive to an overspeed event. For these machines, disconnection from the system is delayed to include a period of deliberate motoring to ensure that overspeed cannot occur. This method is known as sequential tripping. A reverse-power element indicates that the machine is motoring. Fig. 1 shows an example of sequential tripping logic. In this example, 32-1 is the reverse-power element for motoring detection, and 32-2 is the element for sequential tripping. Typical time settings for steam units are 30 seconds for 32-1 and 3 seconds for 32-2.

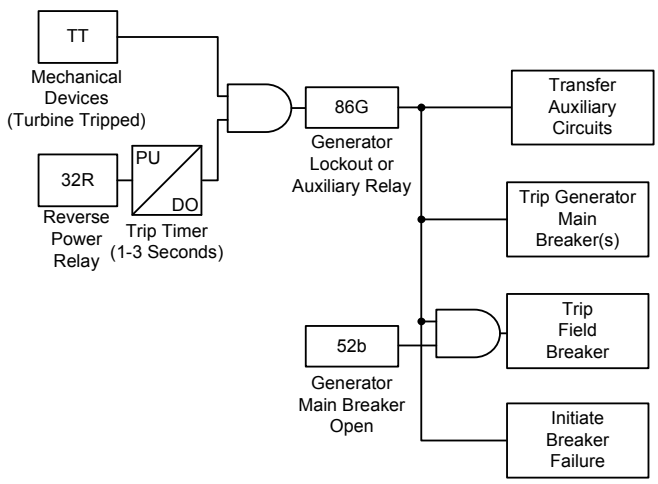

Fig. 1. Sequential Tripping Logic Example [1]

For increased security against possible overspeed, steam turbine manufacturers recommend that the sequential tripping circuit have a mechanical confirmation of steam flow cutoff in series with the reverse-power relay. Typically, this mechanical confirmation uses either steam valve closed-position switches or the contact from a differential pressure switch connected across the high-pressure turbine [2].

F. Application of Settings

The pickup criteria are the same as those given in Section III, Subsection A.

IV. References

[1] *IEEE Guide for AC Generator Protection*, IEEE Standard C37.102-2006.

[2] E. Fennell, K. Kozminski, M. Bajpai, S. Easterday-McPadden, W. Elmore, C. Fromen, J. Gardell, W. Hartmann, J. Hurley, P. Kerrigan, K. Khunkhun, C. Mozina, G. Nail, S. Patel, G. Pence, A. Pierce, D. Smaha, S. Usman, P. Waudby, and M. Yalla, "Sequential Tripping of Steam Turbine Generators," *IEEE Transactions on Power Delivery*, vol. 14, issue 1, pp. 132–141, Jan. 1999.