Generator Breaker Failure

Christopher Ruckman and Brent Oxandale

***Abstract*—A breaker failure scheme needs to be initiated when the protective relay system operates to trip the generator circuit breaker but the breaker fails to operate. Because of the sensitivities required for generator protection, generator breaker failure backup by remote terminal relaying is not possible. Local breaker failure protection is required. Breaker failure protection for generator breakers is similar to that of other breakers on the transmission system, but some subtle differences are addressed in this section of the tutorial.**

I. Introduction

Breaker failure protection provides for the tripping of backup breakers if a fault or abnormal condition is detected by protective relays and the associated generator breaker does not open after trip initiation. Using Fig. 1 as an example, if a fault or abnormal condition in the Generator 1 protection zone is not cleared by Breaker 1 within a predetermined time, locally tripping Breaker 2, Breaker 3, and Breaker 4 is necessary to remove the fault or abnormal condition.

Similar considerations must be given to multibreaker arrangements such as ring-bus or breaker-and-a-half configurations. Fig. 2 illustrates the operation of a local breaker failure scheme applied to a ring-bus station.

A fault in the Generator 1 protection zone requires tripping of two breakers at Station A. If any breaker fails to clear the fault, breaker failure protection initiates the tripping of an additional local breaker and transfer trips a remote breaker.

Fig. 3 depicts a basic breaker failure protection scheme flow chart.

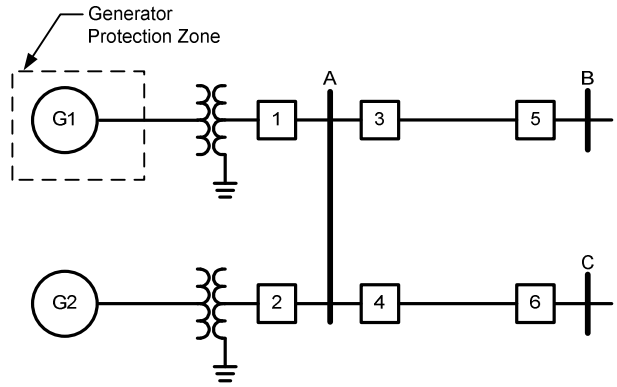

Fig. 1. Directly Connected Generator

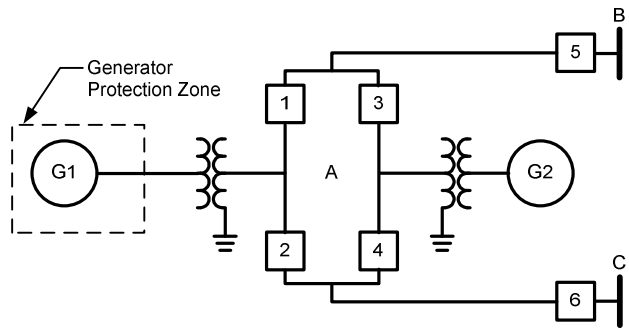

Fig. 2. Ring-Bus Connected Generator

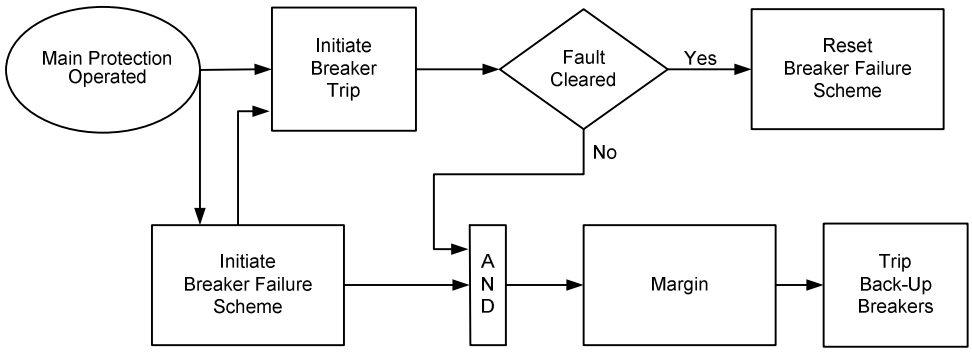

Fig. 3. Breaker Failure Protection Scheme Flow Chart

II. Generator Breaker Failure Logic

A functional diagram of a typical generator zone breaker failure scheme is shown in Fig. 4. Like all such schemes, when the protective relays detect an internal fault or an abnormal operating condition, they will attempt to trip the generator breaker and, at the same time, initiate the BF (breaker failure) timer. If the generator breaker does not clear the fault or abnormal condition in a specified time, the timer will trip the necessary breakers to remove the generator from the system. As shown in Fig. 4, the BF timer is initiated by the combination of a protective relay operation and either a current detector (CD) or a breaker closed (52a) status.

The breaker closed (52a) status must be used because faults and abnormal operating conditions, such as stator or bus ground faults, overexcitation (V/Hz), excessive negative-sequence current, excessive underfrequency, reverse power flow, etc., may produce insufficient current for CD operation. If each breaker pole operates independently, each breaker closed (52a) status from all three poles should be paralleled and connected into the logic circuit to provide single-pole breaker failure protection.

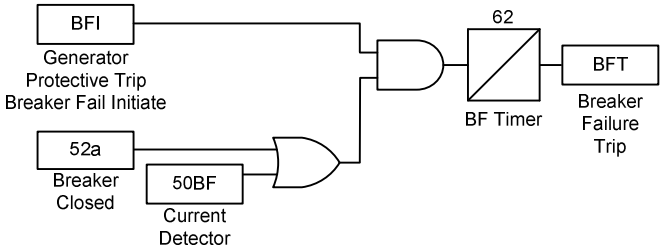

Fig. 4. Functional Diagram of a Generator Breaker Failure Scheme

Fig. 5 shows a variation of this scheme that is applicable to electromechanical current detectors in which the time-out of the BF timer enables the CD to determine if current continues to flow. With this scheme, the pickup time of the CD does not enter into the setting of the BF timer because the CD is not armed until the BF time has expired.

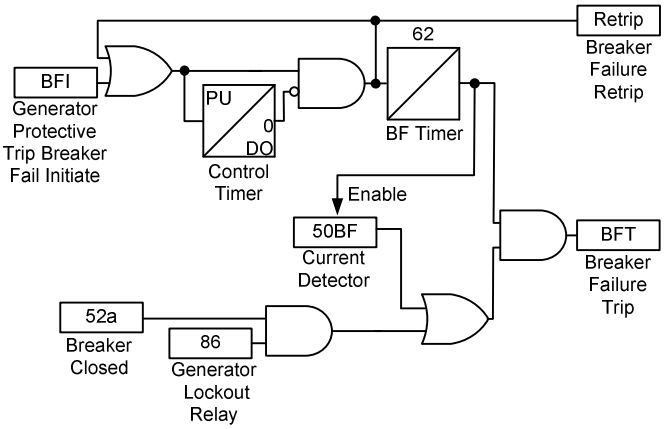

Fig. 5. Functional Diagram of an Alternate Generator Breaker Failure Scheme

While many methods can initiate the breaker failure scheme, it is generally desirable to separate the generator zone protection into groups and have each group operate a separate lockout or auxiliary relay that trips the generator and initiates the breaker failure scheme. With this philosophy, a single lockout or tripping relay failure will not eliminate all protection (See Chapter 5.1). Note that all protective relays in the generator zone should initiate the breaker failure scheme.

Special consideration is necessary when lockout relays are not used in the protective scheme to initiate breaker failure. The protective relay outputs should be sealed in to ensure that breaker failure logic is maintained after the initial fault condition subsides. Fig. 5 includes seal-in logic and a control timer that provide a means to ensure that BF tripping can occur for momentary breaker failure initiate (BFI) signals. For this scheme, the BFI signal is sealed in until the control timer, which is always set longer than the BF timer, times out. This scheme also limits the time window for producing a BF output to a short period following a BFI signal.

Another factor to consider is the operating procedure when a machine is shut down for maintenance. When a ring-bus, breaker-and-a-half, or double-breaker double-bus arrangement is used on the high side of the generator step-up transformer, some utilities isolate the unit generator via a disconnect switch and close the high-voltage breakers to close the ring or tie the two buses together. Under these conditions, isolating the lockout and trip relay contacts prevents unnecessary breaker failure backup operation during generator relay testing. Test switches are sometimes used for this function. When communication is used to activate breaker failure protection in place of hard-wired output contacts, isolating or disabling the signal is necessary to prevent inadvertent breaker tripping and breaker failure initiation during relay testing and communications channel maintenance. Note that if the generator is connected to the system through two circuit breakers, each breaker must be equipped with an independent breaker failure scheme, and both schemes should be isolated to prevent unnecessary tripping during testing.

In the example illustrated in Fig. 5, the 52a breaker failure tripping path is ANDed with the generator lockout relay status. Because this scheme effectively eliminates the generator breaker 52a status from the breaker failure logic before the generator lockout relay trips, it is only applicable when all generator breaker trips actuate the generator lockout relay. The ANDing of the 52A with the 86G is also used for dual-breaker applications where the BFI signal may also be generated by line or bus relays on the adjacent zone. Thus, the less reliable 52a sensing of breaker opening is restricted to generator trips only.

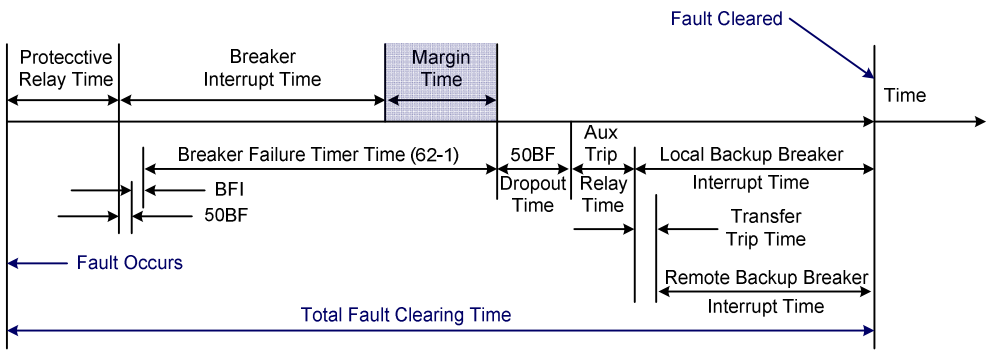

Fig. 6. Breaker Failure Timing Chart

III. Breaker Failure Timing

One of the most important criteria for determining breaker failure timing is the critical clearing time to maintain system stability, while not allowing a generator or group of generators to go out-of-step from the rest of the system. Breaker failure protection should be fast enough to maintain system stability but not so fast as to compromise tripping security. This is particularly important on bulk transmission lines where stability is critical. In general, the more severe the fault, the faster the fault must be removed from the system to maintain stability. For example, a bolted three-phase fault on the high-voltage bus of a substation adjacent to the generating facility will have a lower critical fault clearing time than a phase-to-phase or phase-to-ground fault. See Chapter 1 and Chapter 3.6 for more discussion on generator stability.

Fig. 6 shows a timing chart for a typical breaker failure scheme. The shaded margin time provides security and should accommodate the following:

- Excessive breaker interrupting time
- Time overtravel (electromechanical relays only)
- CT (current transformer) and VT (voltage transformer) errors
- Safety factor

Of course, this chapter focuses on designing a breaker failure protection system for the generator breaker. The critical clearing time for the generator with which the breaker is associated is not important because the generator is coming offline anyway. But in a multiple-unit power station, the critical clearing time for the adjacent generators is important in determining the time setting.

IV. Fault Detectors

Fault detectors are nondirectional overcurrent devices (or elements in a multifunction relay) with instantaneous pickup and dropout time characteristics. Fault detectors that have a high dropout-to-pickup ratio and whose dropout time is minimally affected by CT saturation and dc offset in the secondary circuit are recommended. Because generators may be served from two breakers, it is important that the CT ratios, excitation characteristics, and fault detector settings be adequate for the maximum fault currents through each breaker. Both CTs should have the same ratings and adequate capacity to handle the circuit burden.

V. CT Location

Careful consideration should be made when selecting the location of the CTs used as an input to the current detectors in a generator breaker failure scheme. The selected CTs should always measure the current flowing directly into the generator breaker and thus be located locally to the breaker. Generator neutral-side CTs are never appropriate for generator breaker failure because the generator will continue to supply current to an in-zone fault until the stored energy in the field dissipates—even after the generator breaker successfully opens. This will result in an unnecessary backup trip.

VI. Open Generator Breaker Flashover Protection

Another form of breaker failure that may occur and damage the generator is an open breaker flashover (i.e., an internal or external flashover across the contacts of one or more breaker poles to energize the generator). This type of breaker failure protection is described in detail in Chapter 4.1 and is briefly summarized in this section because breaker flashover is a form of generator breaker failure. Breaker flashover is most likely to occur just prior to synchronizing or just after the generator is removed from service, when the voltage across the generator breaker contacts approaches twice its nominal value as the generator slips in frequency with respect to the system. Although circuit breakers are rated to withstand this voltage, the probability of a flashover occurring during this period is increased. Rarely are such flashovers simultaneous three-phase occurrences; thus, most protection schemes are designed to detect the flashover of one or two breaker poles.

If one or two poles of a breaker flash over, the resulting current unbalance will generally cause the generator negative-sequence relay or possibly ground overcurrent backup relays to operate. This initiates tripping of the flashed-over breaker. Because the flashed-over breaker is already open, the generator cannot be isolated by tripping the breaker. In this case, breaker failure relaying is initiated. As shown in Fig. 4, breaker failure relaying is initiated if the CDs are set with appropriate sensitivity.

Modifying the breaker failure scheme, as shown in Fig. 7, decreases breaker flashover detection time. For high-side generator breakers, an instantaneous overcurrent relay (50G) is connected to the neutral of the generator step-up transformer. The relay output is supervised by the generator breaker open (52b) status and provides an additional start to the breaker failure scheme. When the generator breaker is open and one or two poles of the breaker flash over, the resulting transformer neutral current is detected by the 50G relay without the delay that would be associated with negative-sequence or neutral backup relays. Again, CDs associated with the generator breaker failure should be set with sufficient sensitivity to detect this flashover condition.

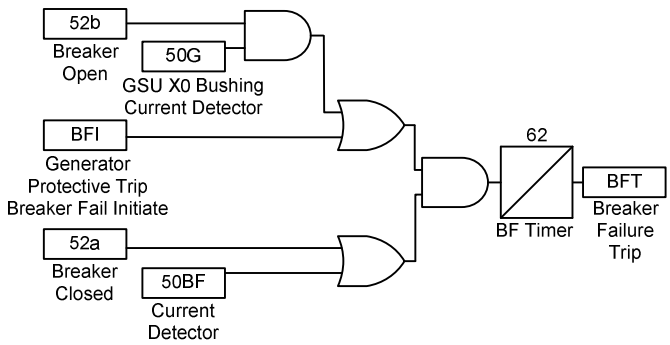

Fig. 7. Modified Breaker Failure Logic

For low-side generator breakers, instantaneous generator neutral overcurrent or neutral overvoltage elements are necessary to detect breaker flashover. Again, the relay output is supervised by the generator breaker open (52b) status and provides an additional start to the breaker failure scheme.

Generator breaker flashover may also be detected by breaker pole disagreement relaying. This relay monitors the three-phase currents flowing through the breaker and senses whether any phase is below a certain threshold level (indicating an open breaker pole) at the same time that any other phase is above a substantially higher threshold (indicating a closed or flashed-over pole). For breaker-and-a-half or ring-bus applications, the zero-sequence voltage ($3V_0$) across the breaker supervises the relay tripping to prevent false operation due to current unbalances caused by dissimilarities in phase bus impedances.

VII. Conclusion

This tutorial chapter summarizes breaker failure protection practices that are detailed in [1] and [2] with more explanation of basic concepts. Breaker failure schemes are generally connected to energize a lockout relay that trips the necessary backup breakers, initiates the transfer tripping of necessary remote breakers, and isolates the generator.

For additional information related to breaker failure protection, please refer to [3] and [4].

VIII. References

[1] IEEE Power System Relaying Committee Report, "Summary Update of Practices on Breaker Failure Protection," *IEEE Transactions on Power Apparatus and Systems*, vol. PAS-101, issue 3, pp. 555–563, Mar. 1982.

[2] *IEEE Guide for AC Generator Protection*, IEEE Standard C37.102-2006.

[3] *IEEE Guide for Breaker Failure Protection of Power Circuit Breakers*, IEEE Standard C37.119-2005.

[4] C. J. Mozina, R. F. Arehart, J. Berdy, J. J. Bonk, S. P. Conrad, A. N. Darlington, W. A. Elmore, H. G. Farley, D. C. Mikell, G. R. Nail, H. O. Ohmstedt, A. C. Pierce, E. T. Sage, D. E. Sanford, L. J. Schulze, W. M. Strang, G. Stranne, F. Tajaddodi, and T. Wiedman, "Inadvertent Energizing Protection of Synchronous Generators," *IEEE Transactions on Power Delivery*, vol. 4, issue 2, pp. 965–977, Apr. 1989.