Out-of-Step Protection

Juan Gers and Michael Thompson

***Abstract*—Many combinations of operating conditions, faults, and other disturbances can cause an out-of-step condition between two parts of a power system or between two interconnected systems. If such an event occurs, the asynchronous generators should be tripped as soon as possible to prevent generator damage or avoid a widespread outage. This section of the tutorial discusses the need for out-of-step generator protection, reviews basic transient stability concepts, describes the out-of-step impedance characteristics typical of large generators connected to high-voltage transmission systems, and presents various relaying schemes that are used for generator out-of-step protection. A thorough procedure to determine the settings is proposed and illustrated with a case study, which includes transient stability simulation cases and out-of-step relay performance testing using COMTRADE (Common Format for Transient Data Exchange) files.**

I. Introduction

Electrical power systems are exposed to a variety of abnormal operating conditions such as faults, generator loss, line tripping, and other disturbances that can result in power oscillations and consequent system instability. Under these conditions, appropriate relay settings are essential to ensure proper protection (i.e., the disconnection of generators that lose synchronism and the blocking of undesired operation of distance relays associated with HV [high-voltage] lines). This topic has received special attention since the blackout of August 14, 2003, that severely affected millions of electrical system users in the Midwest and Northeastern United States. During this event, many relay schemes did not perform appropriately.

Transient stability studies help to determine if a system will remain in synchronism following major disturbances. The nature of these problems requires the solution of nonlinear differential and algebraic equations by direct methods or by iterative, step-by-step procedures.

Usually, the time period under study is within the first second following a system fault. If the machines connected to the system remain in synchronism within the first second, the system is considered stable. In contrast, for multiswing stability problems, the effects must be considered over an extended time period. Thus, sophisticated models must be used to accurately reflect machine behavior.

During the past several decades, system performance criteria have become more stringent, and improved cooling methods in generator designs have allowed larger MVA capacities for a given volume of cooling material. This trend has reduced inertia constants and raised machine reactances, especially on larger units. Also, the use of more HV and EHV (extra-high-voltage) transmission lines to transmit larger power levels over longer distances has resulted in reduced critical clearing times required to isolate a system fault near a generating plant before the generator goes out-of-step with the power grid. Other factors in addition to prolonged fault clearing that can lead to instability are: operating generators in the underexcited region during light load periods, low system voltage, low unit excitation, excessive impedance between the unit and system, and some line-switching operations.

II. Transient Stability Concepts Review

Chapter 1 provides a basic description of generator instability. Transient stability concepts are further reviewed with a simple lossless transmission line connecting two sources corresponding to a generator at location S and an equivalent power system at location R. The active power, P, transferred from the generator into the network is expressed as:

$$P = \frac{Vs \bullet Vr}{X} \mathrm{Sin}\delta \qquad (1)$$

where:

Vs is the sending-end source voltage magnitude.

Vr is the receiving-end source voltage magnitude.

δ is the angle difference between the two sources.

X is the total reactance of the transmission line that connects the two sources.

With fixed Vs, Vr, and X values, the relationship between P and δ is described in the power angle curve shown in Fig. 1. Starting from δ equal to 0, the power transferred increases as δ increases. The power transferred reaches the maximum value, P_{MAX}, when δ is equal to 90 degrees. After that point, further increases in δ result in a decrease of power transfer.

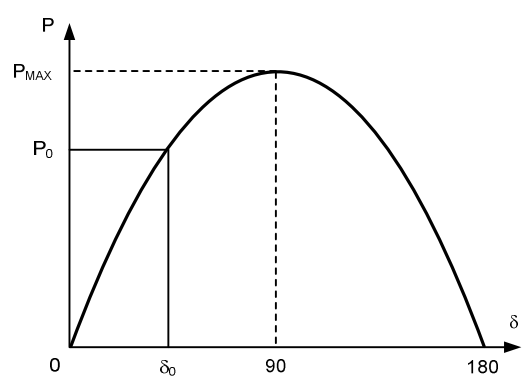

Fig. 1. Power Angle Curve

During normal conditions, the electric power output from the generator produces an electric torque that balances the mechanical torque applied to the generator rotor shaft. The rotor, therefore, runs at a constant speed with this balance of electric and mechanical torques. When a fault occurs, the

amount of power transferred is reduced, which also reduces the electric torque that counters the mechanical torque. If the mechanical power is not reduced during the fault, the generator rotor will accelerate proportionally to the net surplus of torque input.

Developments of this concept, as well as the so-called equal-area criterion, are explained in detail in most power systems books, numerous papers, and in Chapter 1.

When an unstable power system condition exists, one equivalent generator rotates at a speed different from the other equivalent generator on the system. This condition is referred to as a loss-of-synchronism or an out-of-step condition.

If such a loss of synchronism occurs, it is imperative that the generator or system areas operating asynchronously be separated immediately using out-of-step protection (IEEE device number 78). On the other hand, it is important that transmission line distance relays do not operate for system oscillations that might bring the swing locus into its protective zone coverage.

III. Effects of Generators Operating Out of Step

An out-of-step condition causes high currents and mechanical forces in the generator windings and high levels of transient shaft torques. If the slip frequency of the unit approaches a natural torsional frequency, the torques can be high enough to break the shaft. Therefore, it is desirable to immediately trip the unit because shaft torque levels build up with each subsequent slip cycle. This buildup results from continually increasing slip frequency passing through the first natural torsional frequency of the shaft system. Pole slipping events can also result in abnormally high stator core end iron fluxes that can lead to overheating and shorting at the stator core ends. The unit step-up transformer will also be subjected to very high transient winding currents that impose high mechanical stresses on the windings.

IV. Out-of-Step Characteristics

The best way to visualize and detect out-of-step phenomena is to analyze apparent impedance variations with time as viewed at the generator terminals or HV terminals of the unit step-up transformer. These apparent swing loci depend on the type of governor and excitation system of the unit, along with the type of disturbance that initiated the swing. Mho distance relays can detect this impedance variation.

Fig. 2 illustrates a simple visualization of these apparent impedance variations during an out-of-step condition. Three impedance loci are plotted as a function of the ratio of the system voltages, E_A/E_B, which is assumed to remain constant during the swing. The following assumptions are required for this simplified approach:

- Generator saliency is neglected.
- Transient impedance changes caused by fault or fault clearing have subsided.
- Shunt load and capacitance effects are neglected.
- Effects of regulators and governors are neglected.
- The E_A and E_B voltages behind the equivalent impedances are sinusoidal and of fundamental frequency.

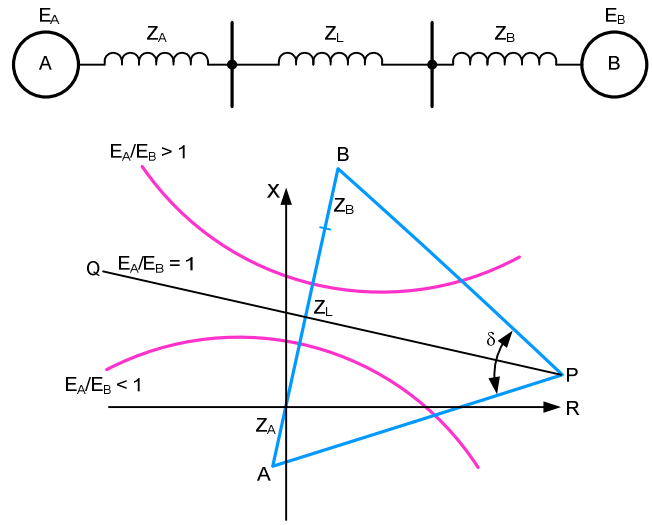

Fig. 2. Typical Out-of-Step Impedance Loci Using Simplified Graphical Procedures

When the voltage ratio E_A/E_B is equal to 1, the impedance locus is a straight line indicated by PQ, which is the perpendicular bisector of the total system impedance between A and B. The angle formed by the intersection of AP and BP on PQ is the separation angle δ between systems. As E_A advances ahead of E_B, the impedance locus moves from P toward Q and δ increases. When the locus intersects the total impedance line AB, the systems are 180 degrees out of phase.

This point when the locus intersects the total impedance line AB and the systems are 180 degrees out of phase is the electrical center of the system. The voltage approaches zero and the current is high, appearing as an apparent three-phase fault at that impedance location. As the locus moves to the left of the system impedance line, the angular separation increases beyond 180 degrees, and eventually the systems will be in phase once again. If the systems remain together, System A can continue to move ahead of System B, and the whole cycle may repeat itself. When the locus reaches the point where the swing started, one slip cycle has been completed. If System A slows down with respect to System B, the impedance locus will move in the opposite direction from Q to P.

When the voltage ratio E_A/E_B is greater than one, the electrical center will be above the impedance center of the system (PQ). When E_A/E_B is less than one, the electrical center will be below the impedance center of the system.

The electrical centers of the system vary as the system impedances behind the line terminals and the equivalent internal generator voltages vary. The rate of slip between systems depends on the accelerating torques and system inertias. Transient stability studies provide the best means to determine the slip rate and locations to where the power swing loci will go relative to the generator terminals or high-side terminals of the generator step-up transformer. Knowing the loci locations helps to determine the best relay scheme to detect an out-of-step condition.

V. Generator Out-of-Step Characteristics

Before the interconnection of power systems, the electrical center during an out-of-step occurrence was in the transmission system. Thus, the impedance loci could be readily detected by line relaying or out-of-step relaying schemes. The power system could be separated without tripping generators. With the advent of HV and EHV systems, large conductor-cooled generators, fast-response voltage regulators, and the expansion of transmission systems, generator and system impedances have changed considerably. Generator and step-up transformer impedances have increased while system impedances have decreased. As a result, the system impedance center and electrical center for such situations occur in the generator or in the step-up transformer. These zones are protected by differential relaying that will not detect power swings.

If the out-of-step swing passes through the transmission lines near the generating station and the line relays are not blocked by out-of-step relaying, the lines may trip before the unit out-of-step relaying operates. Thus, the lines to the generating station could be lost.

Fig. 3 illustrates the out-of-step impedance loci of a tandem compound generator for three different system impedances. The loci were determined from a digital computer study. In these simulations, the excitation system and governor response were included, but the voltage regulator was out of service. Without the voltage regulator response, the internal machine voltages during the disturbance were low; therefore, the electrical centers of the swings were closer to the generator zone.

The instability was assumed to be caused by the prolonged clearing of a three-phase fault on the HV side of the generator step-up transformer. As Fig. 3 illustrates, the circle formed by the impedance locus increases in diameter, and the electrical center moves from within the generator into the step-up transformer as the system impedance increases. All three of these out-of-step characteristics can usually be detected by out-of-step relaying schemes discussed later.

The swing impedance trajectory of a cross-compound generator is more complex. The inertia of the high-pressure unit is generally much smaller than the inertia of the low-pressure unit. The source impedance of the system beyond the step-up transformer will also affect whether the units tend to swing together or separately. The impedance loci will be different if observed from the terminals of each individual unit or terminals of the transformer where the current is the sum of the currents from two units. Transient stability studies can help determine which impedance loci will provide the best means of out-of-step detection.

An out-of-step condition can be detected by the loss-of-field protection or a single impedance relay whose reach encompasses the generator and step-up transformer. However, today, it is more common to use sophisticated out-of-step schemes such as the single blinder scheme, double blinder scheme, or concentric circle scheme. The concentric circle scheme is a variation on the double blinder scheme using circular impedance characteristics. These dedicated out-of-step schemes use logic and/or timers to track the impedance trajectory with respect to time to detect an unstable swing or when a generator slips a pole. The following sections describe each scheme.

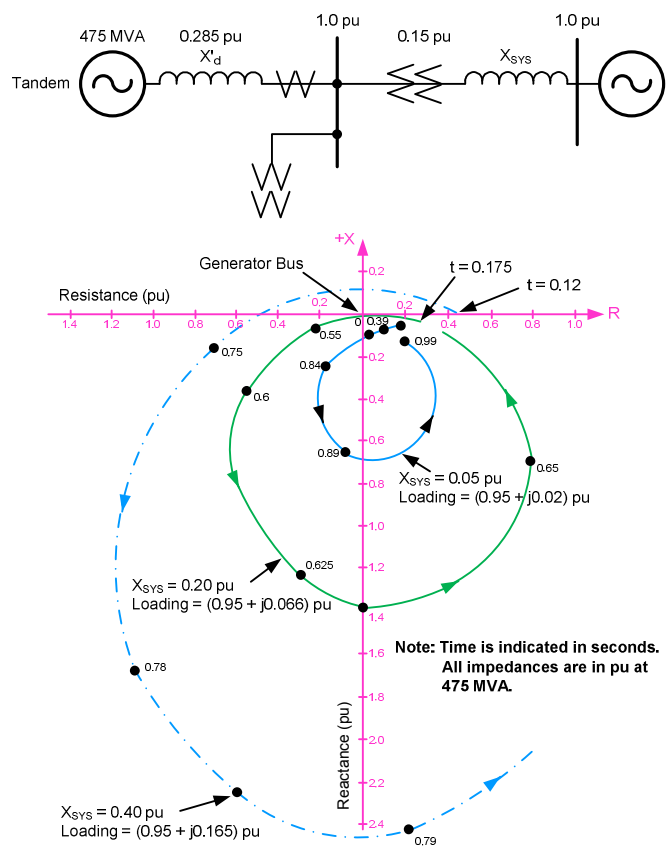

Fig. 3. Loss-of-Synchronism Characteristic of a Tandem Generator

A. Loss-of-Field Relaying

Loss-of-field relaying, as described in Chapter 3.3, is applied for protection of a generator against a loss-of-field condition. Depending on how the conventional mho distance relays are set and applied, some degree of out-of-step protection should be provided for swings that pass through the

generator. Fig. 4 illustrates a dual-mho characteristic loss-of-field protection scheme. These relays are applied to the generator terminals and set looking into the machine.

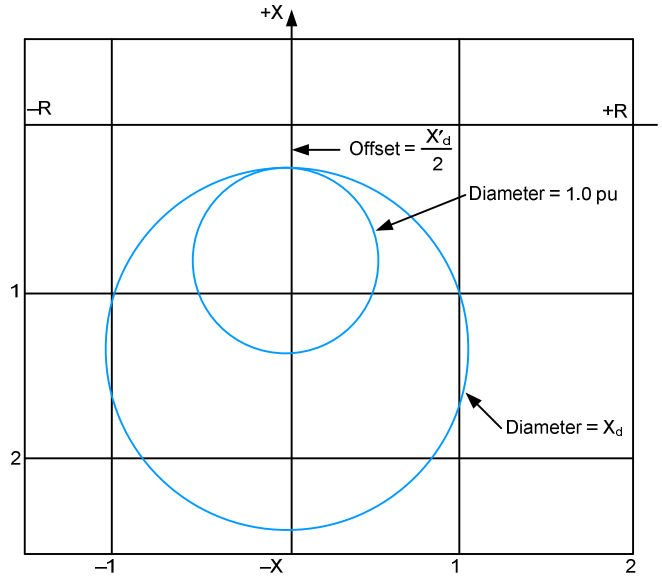

Fig. 4. Typical Loss-of-Field Relay Characteristic

The smaller mho characteristic has no intentional delay; thus, it could sense and trip an out-of-step swing that dwells inside its circle long enough. The larger mho characteristic must have a time delay to prevent misoperations on stable swings that might momentarily enter the circle; hence, it is not likely to detect an out-of-step condition because the swing will not stay inside the relay circle long enough for the timer to expire. This larger diameter characteristic, usually set to the synchronous reactance of the unit and an offset equal to one-half the transient reactance of the unit, is sometimes used by itself on small generators.

B. Single Mho Relay Scheme

A single-phase or three-phase mho distance relay can be applied on the HV terminal of the step-up transformer to look into the generator and its step-up transformer. Fig. 5 illustrates such an application where the relay detects out-of-step swings passing through the step-up transformer and overlapping the mho characteristics of the two loss-of-field relays. The advantages of this scheme are its simplicity, ability to provide backup protection for faults in the step-up transformer and in a portion of the generator, ability to detect inadvertent three-phase energizing of the unit if properly set, and the fact that tripping can occur significantly before the 180-degree point (maximum current and stress point) is reached. The disadvantages are that without supervision, a large circle is exposed to tripping on stable swings and a small circle permits tripping of the generator breakers at high angles approaching 180 degrees, subjecting the breakers to a maximum recovery voltage during interruption.

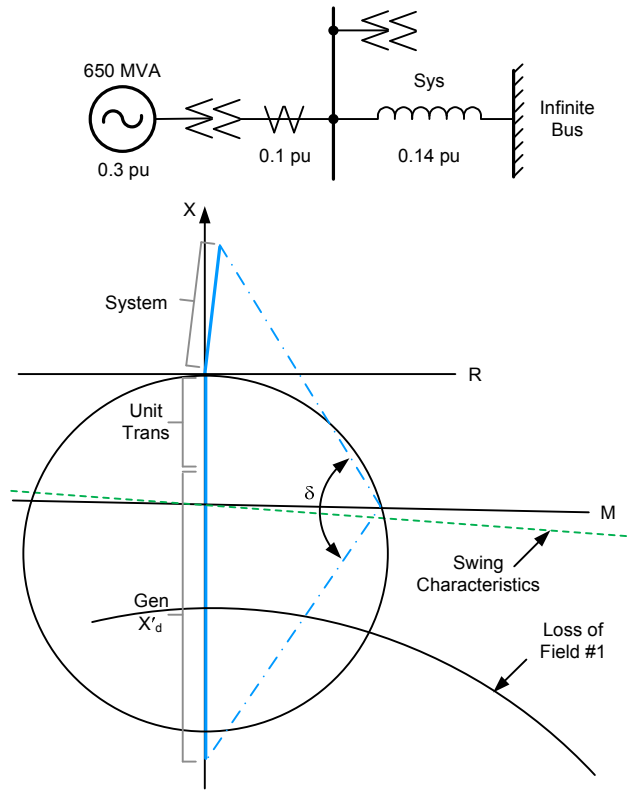

Fig. 5. Application of Mho Circle Scheme

A single mho out-of-step relay scheme can also be applied on the generator terminals with a reverse offset into the step-up transformer. However, to prevent misoperations for faults or swings appearing beyond the HV terminals of the transformer, the reach cannot encompass the HV terminals, or tripping must be delayed.

Fig. 5 illustrates an example of a single mho relay scheme applied at the HV terminals of a generator step-up transformer. The angle of swing, δ, is approximately 112 degrees at the point where the swing impedance comes into the mho circle characteristic. Recovery at this angle may be possible, but as the mho circle is set smaller to avoid tripping on stable swings, a less favorable tripping angle will occur.

Typical practice supervises the mho relay with a high-speed overcurrent fault detector in series with the trip path of the mho relay. This minimizes the possibility of getting a false unit breaker trip for a loss-of-potential condition.

C. Single Blinder Scheme

A single blinder scheme can be applied to the high-side terminals of the step-up transformer looking into the generator or applied to the generator terminals looking into the system. In either case, an offset from the point of measurement is used. Fig. 6 shows a single blinder scheme applied to the high-side of the generator step-up transformer. The sensing elements consist of two impedance elements called blinders that have opposite polarity and a supervisory offset mho relay. The mho supervisory relay restricts the operation area to swings that pass through or near the generator and its step-up transformer.

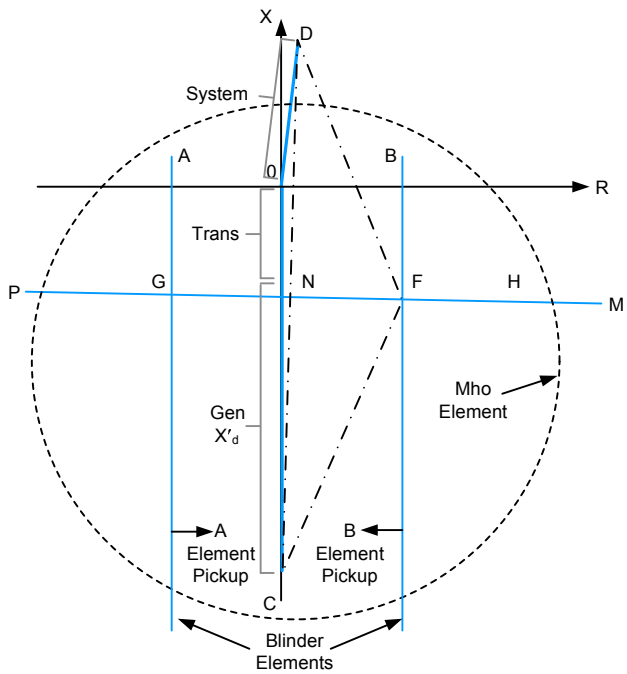

Fig. 6. Single Blinder Scheme

For the example in Fig. 6, an out-of-step swing impedance that progresses along line MP to H will pick up the mho element and cause blinder A to pick up. As the swing progresses, it will cross blinder B at F and the B element will pick up. Finally, the swing impedance will cross the A element at G and the A element will drop out. The breaker trip circuit is completed when the impedance is at G or following reset of the mho supervisory unit, depending on the specific scheme used. The reach settings of the blinders control the impedance NF and NG; hence, the angle DGC or DPC can be controlled to allow the circuit breaker to open at a more favorable angle for arc interruption. Also, depending upon the specific scheme used, the time to traverse between blinders A and B may have to be greater than a settable time to assert the trip. Faults that occur within reach of the supervisory mho element will simultaneously pick up both blinders A and B. But, without a swing that passes through 180 degrees, tripping will not occur. Setting the single blinder scheme is easy and extremely secure. It will only operate after a pole has slipped. Therefore, it cannot misoperate on a stable swing. For these reasons, it is preferred over many of the other schemes.

The advantages of the single blinder scheme over the single mho scheme can be seen by comparing Fig. 5 and Fig. 7. As the diameter of the mho circle in Fig. 5 is increased to provide better sensitivity for out-of-step swings in the generator, undesired tripping could occur for the recoverable swing indicated in Fig. 7. However, the addition of the blinders and trajectory logic would prevent that trip. The blinder scheme will also permit tripping of the generator only when the interruption is at a favorable angle.

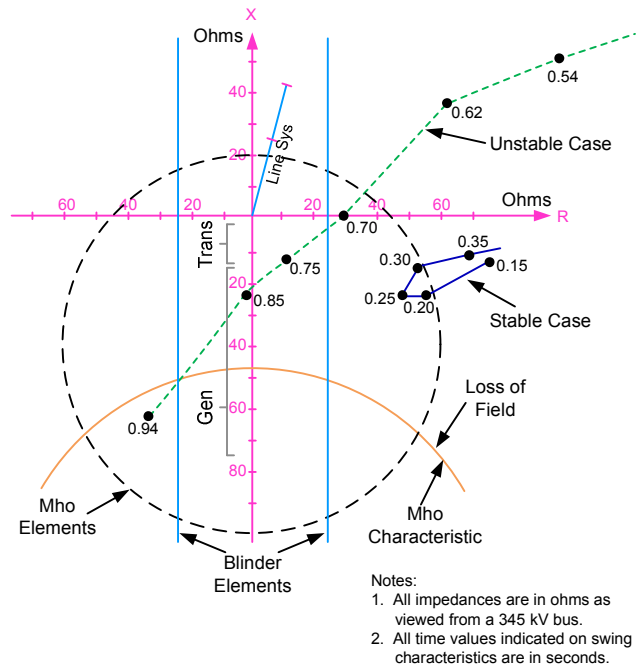

Fig. 7. Example of Single Blinder Scheme for Stable and Unstable Cases

Transient stability computer simulations are useful to determine the critical rotor angle when an unrecoverable swing occurs and the machine loses synchronism with the network. This value is used to set the blinders in a single blinder scheme. Transient stability results could be used also to verify that the time setting is appropriate. For this simulation, the most stringent condition has to be run, providing the shortest time of the swing along the path between the blinders during the out-of-step impedance excursion.

For a more realistic simulation of generator behavior, the analysis should include the appropriate modeling of the governors, voltage regulators, and power system stabilizers (if available). Where stability studies are not available, 120-degree angles are commonly used to set the blinders. At this angle, the swing is generally not recoverable. See [1] for details on how this angle was established.

D. Double Blinder Schemes

Referring to Fig. 8 and Fig. 9, the outer element operates when the swing impedance enters its characteristics at F. The mho element in the double blinder scheme will pick up before the outer blinder element. If the swing impedance stays between the outer and inner element characteristics for longer than a preset time, it is recognized as an out-of-step condition in the logic circuitry. As the swing impedance enters the inner element, the logic circuitry seals in. As the swing impedance leaves the inner element, its travel time must exceed a preset time before it reaches the outer element. Tripping does not occur until the swing impedance passes out of the outer characteristic or, in the case of the double blinder scheme, until the mho supervisory element resets, depending on the logic used.

The double blinder scheme requires the use of transient stability simulations to determine the appropriate outer and inner blinder settings and the excursion time. In this case though, care has to be exercised to ensure that the condition produces the fastest impedance traveling time. Otherwise, the time setting could risk the security of the relay operation. This makes this scheme harder to set and less secure.

Angle DFC is controlled by setting the outer elements to limit the voltage across the opening poles of the generator breaker. Once the swing has been detected and the swing impedance has entered the inner element, it can leave the inner and outer elements in any direction, and tripping will take place. Hence, the inner element setting should respond only to nonrecoverable swings. For this reason, transient stability analysis is extremely important to setting this scheme.

E. Concentric Circle Scheme

The concentric circle scheme uses two mho relays. It operates essentially the same as the double lens scheme. When the concentric circle scheme is used, the inner circle must be set to respond only to nonrecoverable swings.

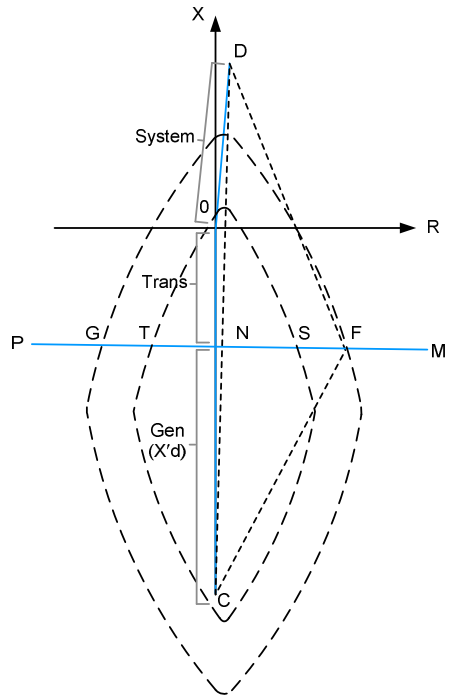

Fig. 8. Double Lens Scheme

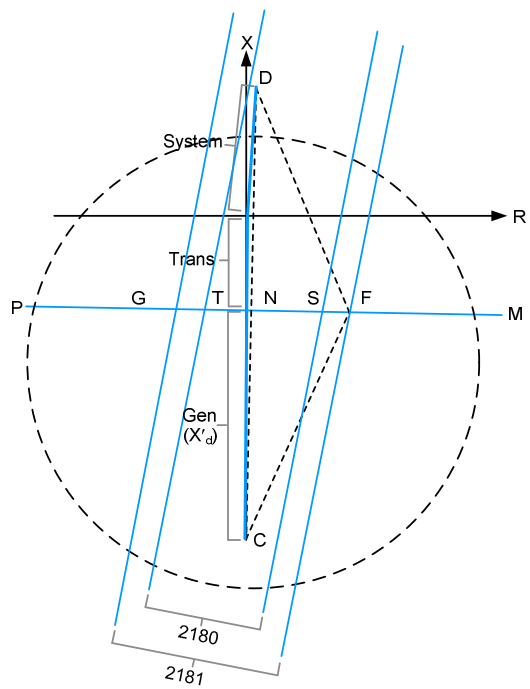

Fig. 9. Double Blinder Scheme

VI. Setting Single Blinder Out-of-Step Protection Elements

Fig. 10 illustrates the impedance settings. The settings of the 78 element are carried out with the following procedure:

1. Model the overall system, and carry out transient stability simulation cases for representative operating conditions. Modeling of the generators should include the voltage regulator, generator governor, and PSS (power system stabilizer) if available. For the single blinder scheme, the data obtained from the transient stability simulation cases are helpful.
2. Determine the values of generator transient reactance (X'_d), unit transformer reactance (X_{TG}), and system impedance under maximum generation (X_{maxSG1}).
3. Set the mho unit to limit the reach to 1.5 times the transformer impedance in the system direction. In the generator direction, the reach is typically set at twice the generator transient reactance. Therefore, the diameter of the mho characteristic is $2X'_d + 1.5X_{TG}$.
4. Determine, by means of the transient stability simulation cases, the critical angle δ_c between the generator and the system. This happens at the point where the system begins to become unstable. If transient stability studies are not available, a 120-degree angle is widely used within the industry.
5. Define the settings of the blinders. The first one normally is set at the critical angle obtained from the stability study plus 10 degrees to increase relay operation security. The second one is set symmetrical to the first one considering the vertical axis.
6. Determine the blinder distance, *d*, which is calculated with the following expression:

$$d = \left[\left(\frac{X'_d + X_{TG} + X_{maxSG1}}{2}\right) \bullet \tan\left(90 - \frac{\delta}{2}\right)\right] \qquad (2)$$

7. Determine the time for the impedance swing to travel between the blinders for the fastest anticipated swing. Note that the swing used in Step 4 to determine δ_c will result in the slowest unstable swing. This value is obtained from an unstable system transient stability study. For implementations of the scheme that requires a minimum traverse time between blinders, the time delay should be set to a value well below the fastest travel time between the two blinders. The setting as suggested by IEEE Standard C37.102 should range from 40 to 100 milliseconds. Setting the delay too long can reduce dependability. A time delay just long enough to prevent misoperation on transients is still secure because a single blinder scheme requires entering from one side and exiting from the other, which can only happen when a pole is slipped.
8. Verify with the transient stability study the settings by checking that the impedance loci enter the mho element outside of the blinders, cross both blinders, and then exits the mho element.

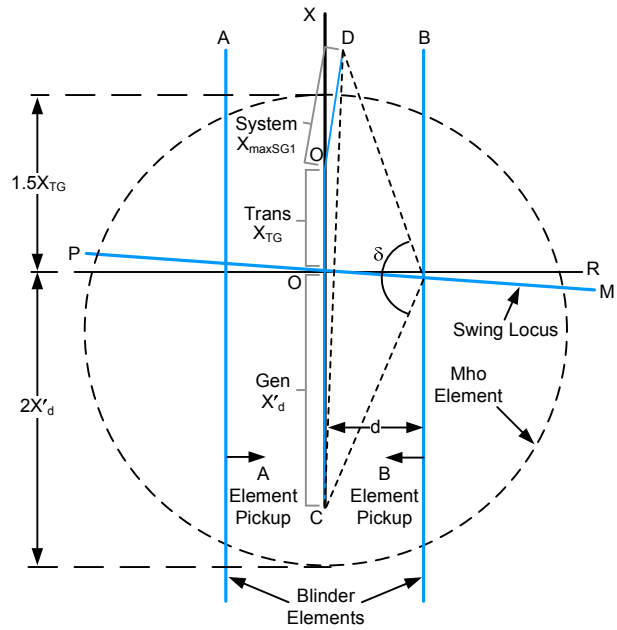

Fig. 10. Procedure to Set Out-of-Step Relays

VII. Case Study

Consider the power system illustrated in Fig. 11 that corresponds to Example 14.9 from [2]. This case study illustrates the procedure to determine the critical clearing time and the travel time within the blinders of an out-of-step relay by means of a transient stability study. The transient stability analysis uses a three-phase fault on Line L_4-5 at the connection point to Node 4. (The other relay settings are not illustrated here because they are rather straightforward as they depend on the reactances of the elements.)

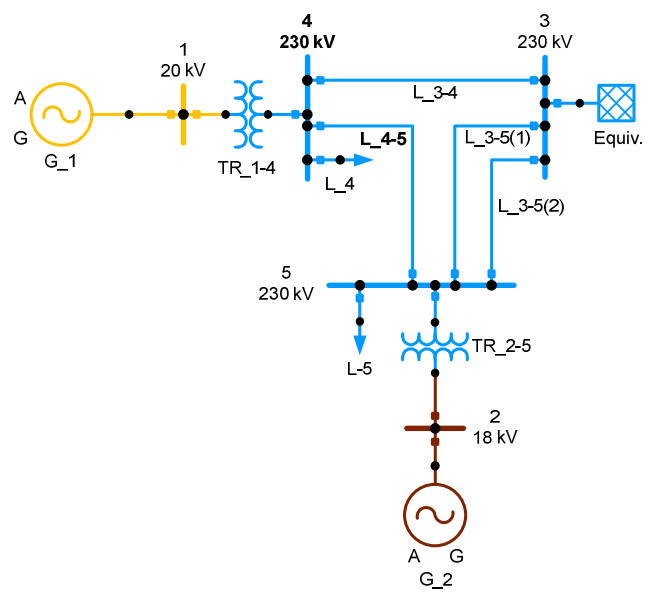

Fig. 11. Example Power System

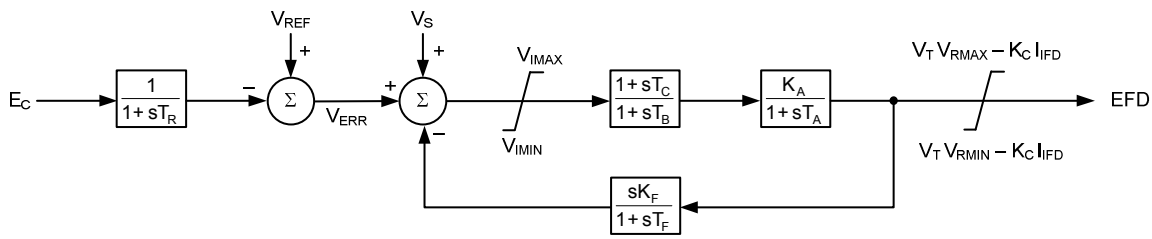

Fig. 12. IEEE Type ST1 Excitation System

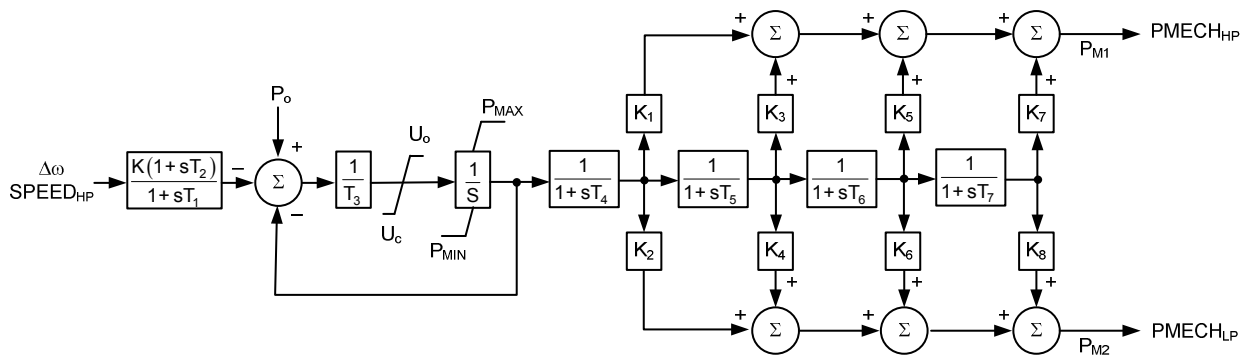

Fig. 13. IEEE Type 1 Speed-Governing Model

A. Considerations

For analysis, consider the following example power system:

- The fault inception is $t = 0.5$ seconds.
- Clearance times starting at $t = 90$ milliseconds (approximately 5 cycles) are analyzed in consecutive steps of 10 milliseconds.
- For simplicity, the fault is removed with the consequent line outage.
- The voltage regulator is an IEEE Type ST1 excitation system. This is a static excitation voltage regulator where the rectifiers provide dc current to supply the generator field. The model represents a system with the excitation power supplied from a transformer that is fed from the generator terminals or from the auxiliary services and is regulated by controlled rectifiers.
- The turbine governor is an IEEE Type 1 speed-governing model. This model represents the speed control (mechanical-hydraulic) and thermal steam turbine.
- For this machine, no power system stabilizer is available.

The models for the excitation system and governor are shown in Fig. 12 and Fig. 13. The excitation system was modeled per [3]. The governor was modeled according to [4].

B. Critical Clearing Time

Determining the critical clearing time is perhaps the most elaborate part of the entire settings process. To achieve this, several simulation cases of the transient stability study are needed to determine when the system loses synchronism or has the first slip. The equal area criteria analysis cited in Chapter 1 can reduce the number of computer simulation cases by providing an estimate of the critical switching time from a stable or unstable case.

C. Maximum Generator Slip

The average slip is obtained from the generator rotor angular change using a time plot. The maximum slip is only of concern to determine if it is within the capability of the relaying scheme. Maximum slip is a function of generator inertia, accelerating torque, and fault-clearing times. Maximum accelerating torques are produced by close-in three-phase faults. Generally considered the worst case, this scenario is studied to determine critical clearing time. This is illustrated in the following example.

VIII. Results

Recall that the transient stability analysis was made for a three-phase fault on Line L_4-5 at the connection point to Node 4 of the system shown in Fig. 11. The solution was obtained by using a commercially available software package.

Numerous cases were run with clearing times starting at *t* equal to 90 milliseconds with increments of 10 milliseconds in an iterative process until stability was lost. The results of three representative cases were analyzed; the corresponding critical fault-clearing times are shown in Table I.

Table I
Critical Fault-Clearing Times

Case	Fault-Clearing Time (ms)
1	90
2	180
3	190

Several plots from the transient stability simulation cases can be obtained for a myriad of applications. For setting out-of-step tripping elements, the most important information is the rotor angle versus time and R + jX versus time. From the respective plots, Case 1 has a clearing time of 90 milliseconds, and the system remains in synchronism. In Case 2, the system is still in synchronism with a clearing time of 180 milliseconds. For Case 3, the system loses synchronism with a clearing time of 190 milliseconds. From this information, it is evident that the critical time to clear the fault is equal to 180 milliseconds after fault inception.

Fig. 14 presents the rotor angle versus time for the three cases considered, each with a different clearing time t_c. The results with voltage regulator and speed governing systems are presented as solid lines. Dotted lines correspond to the results without these controls. This figure shows that the oscillations die out faster when the voltage regulator and speed governing systems are enabled.

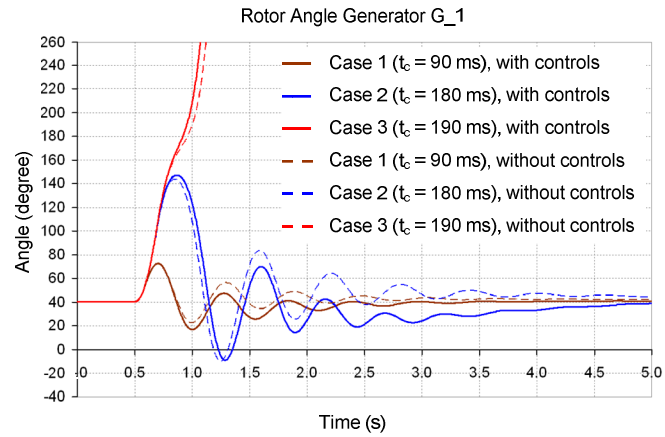

Fig. 14. Rotor Angle Versus Time for the Three Cases Considered

The results for Case 2 show that the critical angle is 145 degrees. Therefore, the first set of blinders is set 10 degrees more at 155 degrees (when *t* is equal to 810 milliseconds) and the second set of blinders is set at 205 degrees (when *t* is equal to 1020 milliseconds). This means that the slowest traveling time of the swing load value between the two blinders is 210 milliseconds.

The R-X diagrams for the three cases in Fig. 15, Fig. 16, and Fig. 17 show the trajectory followed by the impedance seen by the relay during disturbances. When there is an oscillation in the generator that is stable, the swing impedance does not cross the line of impedance.

When the generator goes out-of-step, the transient swing crosses the system impedance line each time a slip is completed, and the relay should trip the generator. In Case 1 and Case 2, the apparent impedance does not cross the system impedance line. For Case 3, the load point crosses the system impedance line, indicating that synchronism is lost; therefore, out-of-step tripping must be allowed. Fig. 18 diagrams all three cases and shows a large difference of the load point excursions.

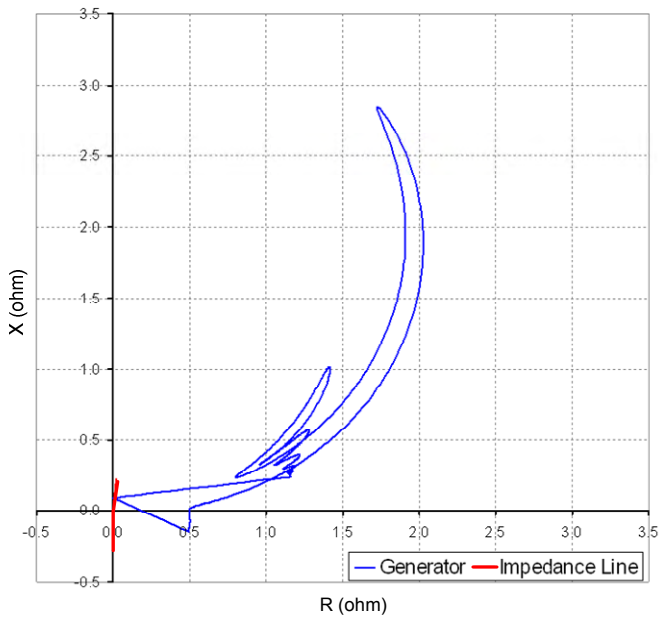

Fig. 15. R-X Diagram for Case 1

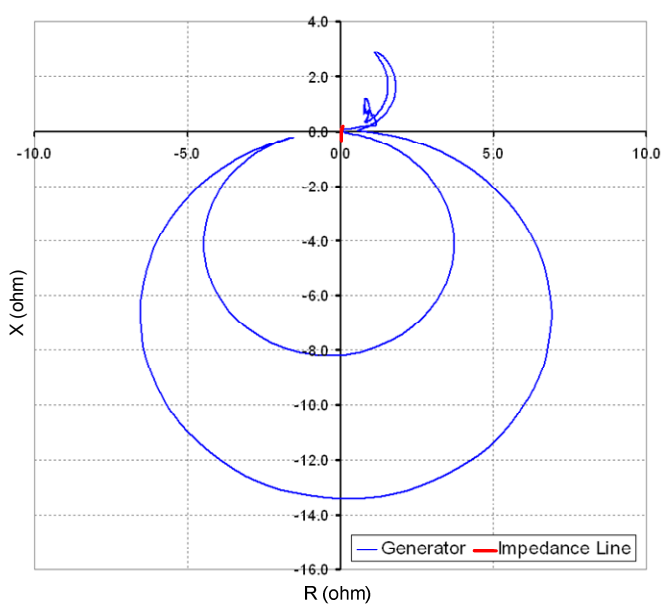

Fig. 16. R-X Diagram for Case 2

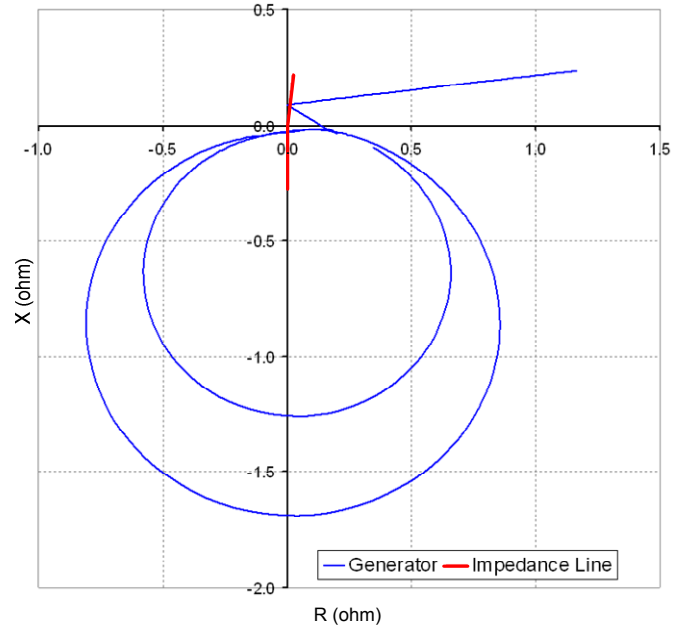

Fig. 17. R-X Diagram for Case 3

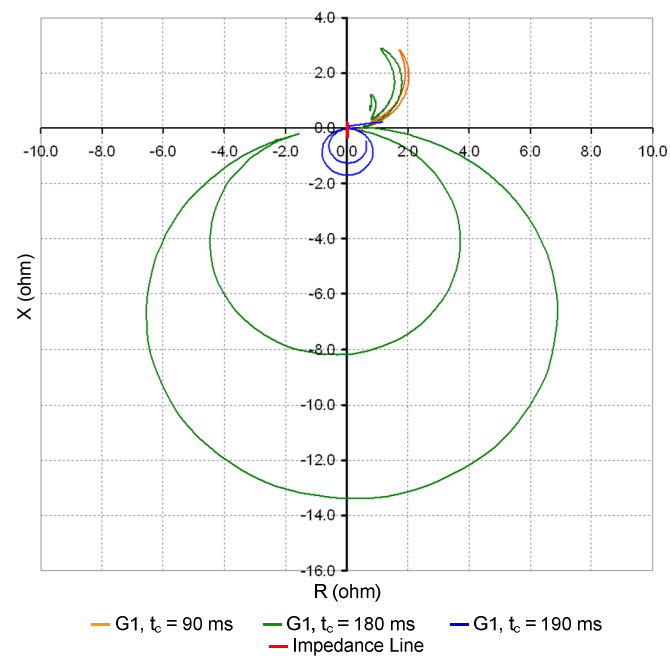

Fig. 18. R-X Diagram for Cases 1, 2, and 3 Simultaneously

The process described, although sometimes tedious and time consuming, helps to determine with confidence the system instability point and the travel time of the load point for each scenario. These values are required to determine the blinder settings and the out-of-step relay timing, as per the procedure indicated in Section VI.

Another consideration is the determination of the most stringent fault. In Section VII, Subsection C, it was mentioned that the maximum accelerating torques are produced by close-in three-phase faults that are illustrated by comparing the results for a three-phase fault at the substation and along the line. The graphs of angle versus time for Generator 1 are

presented with a wider horizontal scale for bolted three-phase faults at Node 4 (Fig. 19) and at 20 percent over Line L_4-5 from Node 4 (Fig. 20).

IX. Simulation With COMTRADE Files

The appropriate protective relay response during transient power swings is vital to ensure that the power system will perform adequately. It is important to restrain the operation of the transmission line distance relays with power swing blocking elements and allow the operation of the generator out-of-step relays when synchronism is lost.

For this purpose, the simulation results obtained from commercially available transient simulation programs are converted to COMTRADE (Common Format for Transient Data Exchange) files. IEEE Standard C37.111-1999 defines this file format for transient waveforms and event data collected from power systems or simulations using power system models.

Relay test equipment reproduces voltage and current signals from these files, and the performance of the relays is verified during out-of-step conditions. Analyzing relay performance beforehand with this type of technique verifies that the relay will respond properly for out-of-step conditions.

Sample results are obtained with a transient simulation program and converted to COMTRADE files. Fig. 21 shows the COMTRADE files obtained for the Phase A current of the system shown in Fig. 11, when the fault is cleared 180 milliseconds after its inception.

Testing out-of-step relays to verify performance during out-of-step conditions is easily achieved by loading these COMTRADE files into a test set and replaying them on the relay inputs.

Fig. 19. Angle Versus Time for Generator 1 for Bolted Three-Phase Faults at Line L_4-5 from Node 4

Fig. 20. Angle Versus Time for the Generator 1 for Three-Phase Fault at 20 Percent Over Line L_4-5 at Node 4

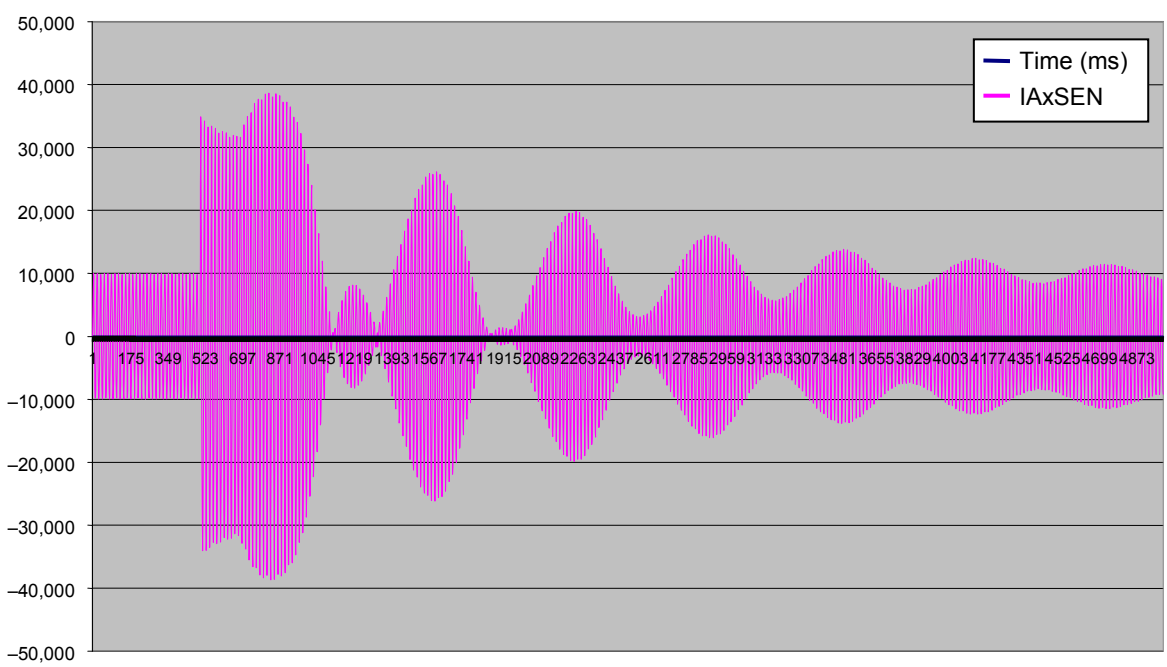

Fig. 21. COMTRADE File Corresponding to the Case Study Phase A Current

X. Out-of-Step Tripping Mode

Out-of-step protection schemes should trip just the generator breaker(s) if the generating unit is capable of withstanding load rejection and carrying its own auxiliaries. Tripping only the generator breaker(s) allows the generator to resynchronize once the system has stabilized. If the unit does not have full-load rejection capabilities, it should be shut down.

XI. Conclusions

This chapter provides general guidelines on the application of out-of-step relaying for generators. This protection should be installed on a generator if the electrical center of the swing passes through the region from the HV terminals of the step-up transformer down into the generator. This condition tends to occur in a relatively tight system or if a low excitation condition exists on a generator. Note that this zone is protected by differential relays that do not respond to power swings. Unit out-of-step protection should also be used if the electrical center is out in the system and the system relays are blocked or not capable of detecting the out-of-step condition.

Out-of-step conditions are simply detected by a mho-distance-type relay oriented to look into the generator and its step-up transformer. The main disadvantages of this protection method are the possibility to trip on recoverable swings and signal the interruption of the generator breaker at an unfavorable swing angle. More sophisticated schemes, such as blinder and lens schemes, minimize the probability of tripping on recoverable swings and permit controlled tripping of the generator breaker at a better swing angle.

Conventional loss-of-field relays offer a limited amount of out-of-step protection for swings deep into the generator impedance, especially if there is any intentional time delay.

Transient stability studies are desirable to determine the behavior of an electrical system subjected to oscillations following power system disturbances and require appropriate system modeling. Among other reasons, transient stability studies should be conducted to properly set out-of-step relays, because the studies provide the critical angle and the travel time of the swing locus between the blinders. These studies are essential for setting double blinder schemes. The results of the transient stability studies can be converted to voltage and current waveform data in COMTRADE format to verify the performance of the out-of-step relays using a relay test set.

In particular, the modeling should include the operation of voltage regulators, governors, and power systems stabilizers as applicable. From the case study, clearly the effect of these elements enhances the performance of the system under transient power swings.

XII. References

[1] J. Berdy, “Out-of-Step Protection for Generators,” presented at Georgia Institute of Technology Protective Relay Conference, May 6–7, 1976.

[2] W. D. Stevenson, *Elements of Power System Analysis*, 4th ed. New York: McGraw Hill, 1982.

[3] *IEEE Recommended Practice for Excitation Systems Models for Power System Stability Studies*, IEEE Standard 421.5-2005.

[4] O. Aanstad, G. J. Bartok, D. H. Berry, R. T. Byerly, F. P. DeMello, R. D. Dunlop, D. N. Ewart, B. M. Fox, L. H. Johnson, R. J. Mills, D. W. Tschappat, and C. C. Young, “Dynamic Models for Steam and Hydro Turbines in Power System Studies,” *IEEE Transactions on Power Apparatus and Systems*, PAS-92, issue 6, pp. 1904–1915, Nov. 1973.