Tripping Modes

Kevin Stephan and Sungsoo Kim

Abstract—**This section of the tutorial provides insight into the basic objectives and industry recommended practices for tripping a generating unit once an abnormality or short circuit has been detected that requires the removal of the unit from service. Applying the proper tripping schemes on generating units should not be underestimated. This effort requires a broad knowledge of the generating unit equipment and its behavior during normal and abnormal conditions. Selection of the proper method of isolating a generator will minimize damage and provide a rapid return to service.**

I. Introduction

A generating unit represents a significant investment for its owners. The generating unit is defined as the turbine (steam, gas, or hydroelectric), generator, transformers, excitation system, bus duct, conductors, terminal equipment, and circuit breakers. The general design objectives of protection systems and their associated tripping schemes include the following:

- Remove only the faulted section from the power system, thus preventing or minimizing the disturbance effect on the unfaulted parts of the system.
- Minimize or prevent damage to equipment.
- Ensure to the maximum possible extent that no single contingency will totally disable the protection on any system.
- Provide the means to permit fast return to service of the affected equipment.

More specifically, the objective of the generating unit protection tripping schemes is to ensure that the effects of faults and disturbances are restricted to local areas. The tripping schemes should be capable of meeting this requirement while experiencing a first-order contingency, such as the failure of a single protective relay to operate or the failure of a breaker to trip.

II. Tripping Schemes

Generally, discrete generator protective functions are grouped together to activate auxiliary tripping relays so that functions with the same generator trip/shutdown modes are established. Where possible, the arrangement of the auxiliary tripping relays should provide redundancy in both trip paths and trip functions, allowing backup relays to trip a separate auxiliary tripping relay from the primary protection. Applying tripping schemes on generating units should not be underestimated. This effort requires a broad knowledge of the generating unit equipment and its behavior during both normal and abnormal conditions. It would be shortsighted to consider only disconnecting the generator from the electrical system without taking into consideration the precise manner in which the generating unit can be isolated from the power system.

For example, auxiliaries for generating units consist of pumps, fans, etc., necessary to operate the unit. For most thermal units (steam, etc.), these auxiliaries must be powered during startup and shutdown as well as while the unit is running. During startup and shutdown, these auxiliaries are powered by a station service source, sometimes referred to as "reserve" or "standby" sources. When the generating unit is online, the auxiliaries are normally switched or transferred to a unit auxiliary transformer (UAT) that is supplied from the generator terminals. When a generator is shutdown, either planned or unplanned, the auxiliaries are transferred to the station service source. The transfer is automatic during a protective trip depending on the tripping mode and protective functions.

Four common methods for isolating the generator from service following unacceptable abnormal operating conditions or electrical faults are described here.

A. Simultaneous Tripping

Simultaneous tripping provides the fastest means of isolating the generator. This tripping mode is used for all internal generator faults and severe abnormalities in the generator protection zone. Isolation is accomplished by simultaneously tripping the generator breaker(s), field breaker, and turbine valves to shut down the prime mover. Auxiliary loads are transferred to a standby source. If a potential for significant overspeed condition of the unit exists, a time delay may be used in the generator breaker trip path. If a time delay is applied, the effect of this delay on the generator and/or system should be determined.

B. Generator Tripping

This mode of isolation trips the generator and field breakers and transfers the auxiliaries. The scheme does not shut down the prime mover and is used where it may be possible to correct the abnormality quickly, thereby permitting a rapid reconnection of the machine to the system. The protection, which trips the generator for power system disturbances rather than internal generator faults and/or abnormalities, can trip through this mode if permitted by the type of prime mover and boiler system (i.e., the machine allows full-load rejection).

C. Unit Separation

The unit separation tripping scheme is similar to generator tripping but initiates only the opening of the generator breakers. This scheme is recommended when maintaining the unit auxiliary loads connected to the generator is desirable.

For example, during a major system disturbance that requires tripping because of low frequency, the standby source may be unavailable. The advantage of this scheme is that the unit can be reconnected to the system with minimum delay. This trip mode requires that the unit be capable of an excitation runback operation following a full-load rejection trip.

D. Sequential Tripping

The sequential tripping mode is primarily used on steam generators to prevent overspeed when delayed tripping has no detrimental effect on the generating unit. It is used to trip the generator for prime mover problems where high-speed tripping is not a requirement. The first devices tripped are the turbine valves. Then, the generator breaker(s) and field breaker are tripped, and the auxiliary load transfer is initiated by a reverse power relay in series with a "turbine valves closed" position switch, providing security against possible overspeed of the turbine by ensuring sufficiently reduced steam flows. For boiler/reactor or turbine mechanical problems, this is the preferred tripping mode because it prevents machine overspeed. However, one disadvantage is the lack of an output for a failure of the turbine valve limit switches or reverse power relay. When this approach is used, backup protection should be provided to ensure tripping in case of failure. This protection is generally provided by a separate reverse power relay that initiates independent tripping. Sequential tripping schemes should be reviewed for correct operation during unit islanding conditions when there is no reverse power to trip the generator (i.e., the high-voltage generator breaker is open, and the generator is feeding its own auxiliaries). During such conditions, another protective function should be incorporated. Keeping unit underfrequency relaying enabled when the generator breakers are open is one option to complete the sequential trip. The sequential trip mode should not override the generator switchyard protection that instantaneously opens the generator breaker when a critical electrical fault occurs that might cause serious damage to the generator or switchyard equipment.

Table I indicates the specific trip action for each trip mode described previously.

TABLE I
TRIPPING ACTION

Tripping Mode	Generator Breakers	Field Trip	Prime Mover Trip	Transfer Auxiliaries
Simultaneous Trip	X	X	X	X
Generator Trip	X	X		X
Unit Separation Trip	X			
Sequential Trip	X*	X*	X	X*

* Generally supervised by turbine valve position switch and reverse power relay

III. TRIPPING SCHEME SELECTION

Many factors contribute to selecting the appropriate tripping scheme. Several key items include the following:

- Type of prime mover: diesel/gas engine, gas turbine, steam turbine, or waterwheel.
- Impact of the sudden loss of output power on the electrical system and prime mover.
- Safety to personnel.
- Operating experience.
- Management of unit auxiliary loads during emergency shutdown.

Fig. 1 depicts the typical complement of protection on a unit-connected generator, including the UAT. Table II and Table III suggest trip logic for the various protective relays. Many of these protective functions are discussed in other sections of this tutorial. Table II was adapted from the IEEE C37.102 Guide for AC Generator Protection [1]. Table III comes from recognized hydroelectric utility experience. Both tables provide guidance in developing an overall generator protection trip scheme. Individual trip schemes will vary depending upon owner preference, operating experience, and specific capabilities of the prime mover and boiler systems. Both tables provide generally accepted industry practices.

The trip requirements of hydroelectric generators are very similar to those of thermal generators in many respects. Despite their similarities, however, the hydroelectric generators may require slightly different trips and shutdown operations. This is because the hydroelectric generators are salient pole machines and relatively slower rotating devices equipped with different mechanical control devices than those of high-speed steam turbine generators.

Auxiliary power for the safe shutdown of big hydroelectric generators may not be as critical because of sufficient stored energy in the hydraulic oil and air systems that close the gates and apply the brakes to the machines. In addition, the use of unit-connected auxiliary power systems is limited and only one of several configurations used in hydroelectric plant design. Hydroelectric auxiliary power systems can have more than one source, and if automatic transfer is implemented, it is often controlled by availability of the source rather than unit tripping [2].

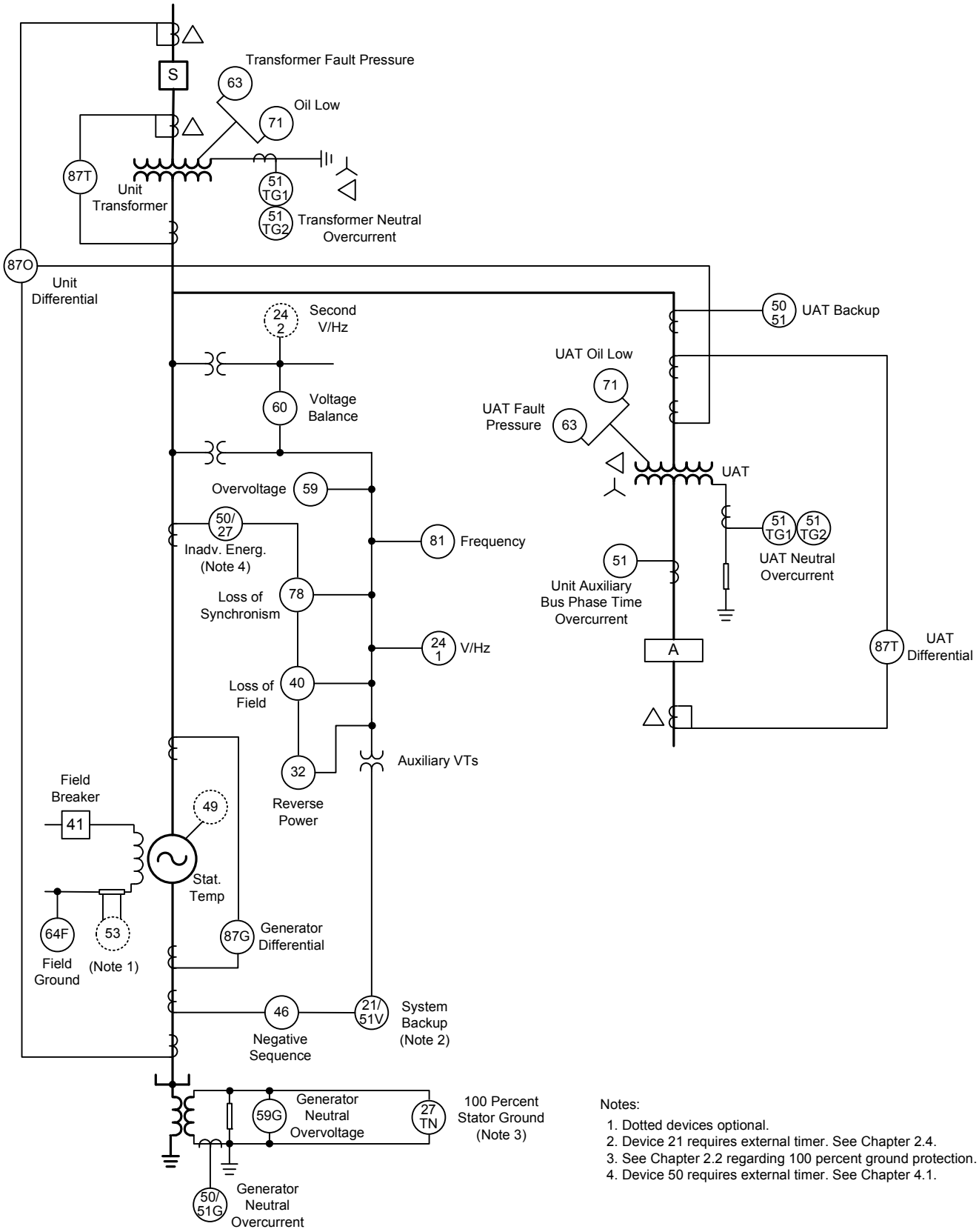

Fig. 1. Typical Unit Generator-Transformer Configuration

TABLE II
SUGGESTED STEAM UNIT TRIP LOGIC

Device	Lockout	Generator Breaker Trip	Field Breaker Trip	Transfer Auxiliaries	Prime Mover Trip	Alarm Only
21 or 51V	86G2	X	X	X	X	
24	86G1	X	See Note 2	X	See Note 11	
32	86G2	X	X	X	X	
40	86G1	X	X	X	See Note 12	
46		X	See Note 7	See Note 7	See Note 7	
49						X
50/27 (See Note 10)		X	X	X	X	
50/51G	86G2	X	X	X	X	
51TG1		X				
51TG2		X	X	X	X	
51TG1 UAT		See Note 6	See Note 6	See Note 5	See Note 6	
51TG2 UAT		X	X		X	
50/51 UAT		X	X	See Note 5	X	
53			See Note 2			X
59	86G2	X	X	X	See Note 11	See Note 1
59G (See Note 9)	86G1	X	X	X	X	See Note 3
60						X
63		X	X	X	X	
63 UAT		X	X	X	X	
64F		See Note 4	See Note 4			X
67N (See Note 3)		X	X	X	X	
71						X
71 UAT						X
78		X	See Note 8	See Note 8	See Note 8	
81		X				
87G	86G1	X	X	X	X	
87GN (See Note 13)	86G1	X	X	X	X	
87T	86T	X	X	X	X	
87T UAT	86UAT	X	X	X	X	
87O	86G2	X	X	X	X	

Notes:
1. Device 59 may be connected to alarm only on some units.
2. If the generator is offline, trip only the field breaker.
3. Used for bused high-impedance grounded generators [1].
4. May be connected to trip per generator manufacturer.
5. Trips the unit auxiliary bus incoming breaker (Breaker A in Fig. 1).

6. If tripping Breaker A results in loss of auxiliaries, these trips are required, and 51TG2/UAT protection is not required.
7. Refer to Chapter 3.4.
8. Refer to Chapter 3.6.
9. 27TH, 59TH, 59THD, 64S trip logic is similar to 59G.
10. The 50/27 function uses voltage supervised overcurrent relaying for inadvertent energizing protection. Other protection functions described in Chapter 4.1 use the same trip logic.
11. Refer to Chapter 3.2.
12. Refer to Chapter 3.3.
13. Also trips low-impedance ground path in a hybrid grounding scheme.

TABLE III
SUGGESTED HYDROELECTRIC UNIT TRIP LOGIC

Device	Lockout	Generator Breaker Trip	Field Breaker Trip	Prime Mover Trip	Deluge (See Note 1)	Damper (See Note 2)	Alarm Only
A87SP (See Note 3)	86G1	X	X	X	X	X	
21		X	X	See Note 5			
24		X	X	X			
27							X
27TN/64G							X
32F		X	X				
32R		X	X	X			
40		X	X	X			
46		X	X	X			
50/27		X	X				
50BF		X	X	X			
59		X	X	X			
59N/64G	86G1	X	X	X	X	X	
64F							X
78		X	X	X			
81O		X	X	See Note 5			
81U (See Note 4)		X	X	See Note 5			
87	86G1	X	X	X	X	X	

Notes:

1. Deluge System: This function provides generator fire protection the generator and limits damage to other nearby generators, equipment, and structures. Two types of fire extinguishing agents are commonly used in the fire protection of generators: carbon dioxide and water. The system is activated by flooding either of these two agents when the simultaneous operation of both a heat activating device and protection operation is warranted.
2. Damper: To regulate the flow of air in a generator chamber, control dampers are normally provided that can be automatically and/or manually closed to starve the room of oxygen in case of fire.
3. Split-phase 87 protection.
4. Trip is optional.
5. No Load Speed (NLS) is referred to as the normal, synchronous speed of the unit (100 percent) when the unit is not connected to load. At this speed, the unit is ready to be synchronized to the system. Governors and gate controllers usually have a preset value that corresponds to a gate position that will spin the unit at or close to NLS.

IV. Other Considerations in Developing Tripping Philosophy

Concern has arisen over several major accidents related to tripping philosophy in generating stations. In large power plants, a breaker-and-a-half or ring-bus yard layout with a disconnect on the generator feed is commonly used. Fig. 2 shows such arrangements.

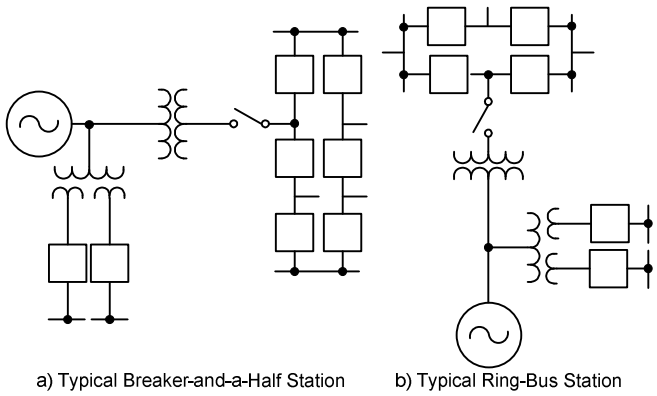

Fig. 2. One-Line Diagrams of Typical Generator Stations

These configurations allow the generator to be taken offline, the disconnect to open, and the breakers to close to maintain another tie between the main buses. In the early phases of plant construction, it is common for ring-bus configurations to be expanded later to a breaker-and-a-half. The ring configuration requires a disconnect switch on the generator feed that can be opened to allow closing the ring when the generator is offline. Some engineers have used auxiliary contacts in the motor operator of these disconnect switches to disable some or all of the generator protection when the generator is offline. While this appears to be a convenient indication of the status of the machine, it can be fooled by abnormal conditions.

A. Disconnect Switch

When protective relaying is routinely disabled with auxiliary contacts from the disconnect switch, the following should be carefully considered. Because of adjustment and linkage problems, the auxiliary contacts may not properly close, and vital protection can be out of service when needed most. Also, if the auxiliary contacts are located inside the motor operator compartment, the contacts may only follow the motor mechanism and not the actual switch blades. When the motor operator is uncoupled from the switch shaft and the switch is closed manually, the protection will be out of service. Even if the auxiliary stack is mounted to follow the disconnect switch operating shaft, reliability problems can arise. Several very serious accidents can be traced directly to using auxiliary contacts to disable protection; therefore, this practice is not recommended.

Some control schemes use the disconnect switch auxiliary contacts to disable certain boiler trips while the machine is in startup. This practice is fairly common on coal-fired units where it takes a long time to get the machine online. If a nuisance trip occurs, many hours may be wasted. While it is necessary to be sensitive to boiler control problems, the generator protection must not be compromised during the startup process by disabling its ability to trip the turbine and/or boiler.

B. Maintenance

When the generator is offline for maintenance, safety rules and procedures may require the generator potential transformers to be racked out and tagged. Also in some instances, current transformers may be shorted and the station dc tripping source may even be disconnected. The design engineer must be aware of these possibilities when determining the type and location of generator backup and inadvertent energizing protection. If the generator is offline, the common belief is that protection is not needed. However, the long list of generators that have been inadvertently energized tends to support the need to have as much of the protection in service as possible, even when the machine is offline. Refer to Chapter 4.1.

V. Conclusion

Selecting the proper trip action of generator protective relays is one of the most important aspects of protecting generators. This task requires a broad understanding of generator protection, the capability of the generator and/or prime mover system and unit operating and maintenance practices. Selection of the appropriate tripping mode will minimize or prevent damage and provide for the rapid return to service of the unit.

VI. Reference

[1] *IEEE Guide for AC Generator Protection*, IEEE Standard C37.102-2006.

[2] V. Tawtel, R. H. Stuart, "Station Service Systems for Large Hydroelectric Generating Stations," *IEEE Transactions on Power Apparatus and Systems*, vol. PAS-87, issue 2, Feb. 1968, pp. 579–584.