Abnormal Frequency Protection

Gabriel Benmouyal and Stephen P. Conrad

***Abstract*—Both the generator and turbine are limited in the degree of abnormal frequency operation that can be tolerated. At reduced frequencies, there will be a reduction in the output capability of a generator. Turbines, especially steam and gas turbines, are considered to be more restrictive to operation at reduced frequencies than the generator because of resonances in the turbine blades. Departure from rated speed under load will bring stimulus frequencies closer to one or more of the natural frequencies of the various blades, and there will be an increase in vibratory stresses. As vibratory stresses increase, damage is accumulated, which may lead to cracking of some parts of the blade structure.**

The primary underfrequency protection for turbine generators depends upon the utility's philosophy. If turbine safety is the primary concern, applying turbine underfrequency protection is one option. Alternatively, the implementation of automatic load-shedding programs on the power system is another. These load-shedding programs should be designed so that for the maximum possible overload condition, sufficient load is shed to quickly restore system frequency to near normal. When automatic load shedding is implemented, backup protection for underfrequency conditions is provided by the use of one or more underfrequency relays and timers on each generator. The underfrequency relays and timers are usually connected to trip the generator.

I. Introduction

When a power system is in stable operation at normal frequency, the total mechanical power input from the prime mover to the generators is equal to the sum of the connected loads and all real power losses in the system. A significant upset of this balance causes an abnormal system frequency condition. Abnormal frequency conditions can cause generators to trip, tie lines to open from overload, or parts of the system to separate because of power swings and resulting instability. This could result in the power system separating into one or more electrically isolated islands.

Most utilities have implemented an automated load-shedding program to prevent total system collapse as well as minimize the possibility of equipment damage during an abnormal frequency operating condition. These load-shedding programs are designed to:

- Shed just enough load to relieve the overloading on connected generation.
- Minimize the risk of damage to the generating plant.
- Mitigate the possibility of cascading the event as a result of a unit underfrequency tripping.
- Quickly restore system frequency to near normal.

The following two types of abnormal frequency conditions can occur on a power system:

- Underfrequency condition occurs on a power system as a result of a sudden reduction in input power through the loss of the generator(s) or key intertie(s) importing power. This can produce a decline in the speed of the generator, resulting in system frequency decline.
- An overfrequency condition occurs as a result of a sudden loss of load or key interties exporting power. Loss of electrical power due to the initial load drop causes acceleration of units and a resulting increase in system frequency.

The following are two major considerations associated with operating a generating plant at an abnormal frequency:

- Protection of equipment from damage that could result from operation at an abnormal frequency.
- Prevention of inadvertent tripping of the generating unit for a recoverable abnormal frequency condition that does not exceed the plant equipment design limits.

The major parts of a generating plant affected by abnormal frequency operation are generator, transformers, turbine, and the station auxiliary loads. The effect of abnormal frequency conditions on these major parts of a generation plant will be discussed in this section, along with recommended protection.

Keep in mind that much of the information concerning the operation of turbines and generators at off-nominal frequency is proprietary and may vary from one manufacturer to another. In view of that situation, it is recommended that the relevant information for a particular piece of equipment or installation regarding its frequency operation capabilities should be obtained from the manufacturer. It is now customary practice for the equipment manufacturer to give final approval of the frequency protection scheme for a turbine or generator. In most applications, generator underfrequency relay settings, both minimum operate and time delay, can coordinate with system underfrequency load-shedding programs. This coordination should enhance generator/turbine protection and maintain system reliability.

II. Conformance to IEC 60034:2007

Some turbine generators are designed to accommodate the frequency voltage characteristics from IEC 60034-3:2007, Rotating Electrical Machines – Part 3. This standard requires generators to deliver continuously rated output at the rated power factor over the ranges of ±5 percent in voltage and ±2 percent in frequency, as shown by the shaded area in Fig. 1.

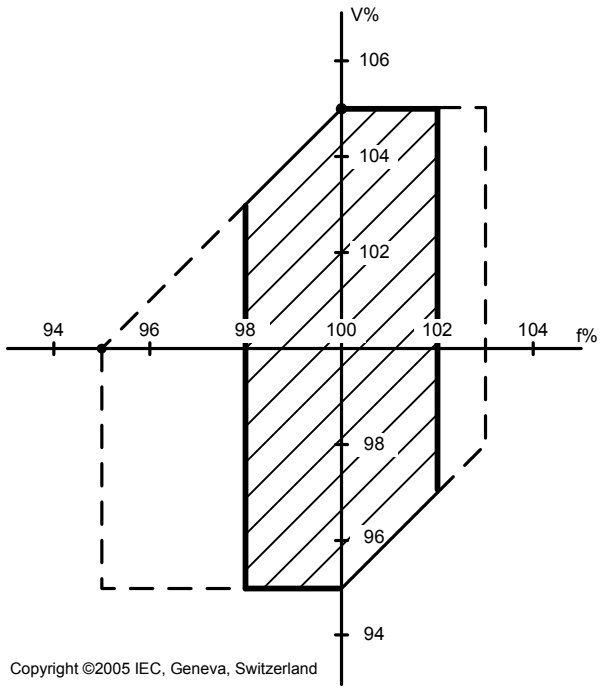

Fig. 1. Operation Overranges of Voltage and Frequency [1]

IEC 60034-3:2007 recommends that operation outside the shaded area "be limited in extent, duration and frequency of occurrence." A manufacturer could, therefore, impose severe time restrictions for the generator itself, particularly for operation below 95 or above 103 percent of rated frequency (respectively 57 or 61.8 Hz on a 60 Hz basis) and, to a lesser extent, for operation outside of the continuous range of 98 to 102 percent of rated frequency.

In view of these considerations, a manufacturer may require, for the generator only, frequency operational limits in the form of time-frequency characteristics. In such situations, the principal goal of frequency protection schemes is to return the frequency to the continuous IEC operating frequency range (98 to 102 percent of rated frequency) as soon as possible and minimize operation outside of this range in extent, duration, and in concert with load-shedding practices.

III. Abnormal Frequency Operation in Steam Generating Plants

A. Generator Over-/Underfrequency Capability

The only known restriction imposed by standards on the abnormal frequency operation of synchronous generators is conformance to IEC 60034-3:2007 as noted in the previous paragraph. When restrictions imposed by this standard are not relevant, the following general considerations are still applicable.

The permissible short-time operating levels for both the stator and rotor for cylindrical-rotor synchronous generators are specified in IEEE C50.13, Standard for Cylindrical-Rotor 50 Hz and 60 Hz Synchronous Generators Rated 10 MVA and above. The limitations on generators operating in an underfrequency condition are less restrictive than those placed on the turbine. However, when generator protection is required, it has been industry practice to provide underfrequency protection. Overfrequency is usually the result of a sudden reduction in load and therefore is usually associated with light-load or no-load operation. During overfrequency operation, machine ventilation is improved, and the flux densities for a given terminal voltage are reduced. Therefore, operation within the overfrequency limits of the turbine will not produce generator overheating so long as rated kVA and rated voltage are not exceeded.

If the generator voltage regulator is left in service at significantly reduced frequencies, the volts-per-hertz limitation of a generator could be exceeded. However, most incidents of excessive volts per hertz occur for reasons other than reduced frequency operation and are addressed in Chapter 3.2.

B. Turbine Over-/Underfrequency Capability

The primary consideration in operation of a steam turbine under load at other than the synchronous frequency is the protection of the long tuned blading in the low-pressure turbine element. Fig. 2 illustrates a composite representing the most restrictive limits for large steam turbine partial- or full-load operating limitations during abnormal frequency [2]. Operation of these stages under load at a speed that causes a coincidence of blading natural frequency band will lead to blading fatigue damage and ultimately blading failures. This problem can be particularly severe when negative-sequence current flows through the generator armature, thereby exciting torsional frequencies, with blade resonance around 120 Hz.

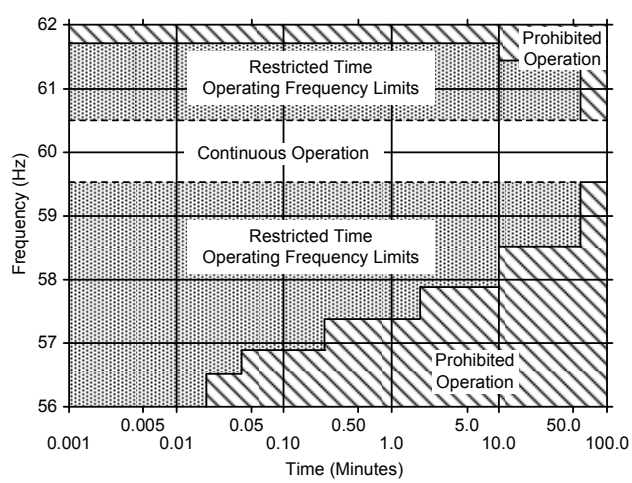

Fig. 2. Hypothetical Composite of Steam Turbine Partial- or Full-Load Operating Limitations During Abnormal Frequency [2]

Overfrequency protection is generally not applied because governor runback controls or operator actions are counted upon to correct the turbine speed. However, considerations must be given to the impact on overspeed protection and isolation of the unit during an overfrequency condition. This is necessary to ensure coordination and protection for turbine blades for overfrequency conditions. Because the operating limits are the same as shown above the 60 Hz line in Fig. 2, protection methods for preventing turbine operation outside the prescribed limits will be restricted to underfrequency protection. System load-shedding schemes, when properly designed and coordinated with the underfrequency protection, provide the initial turbine underfrequency protection.

Appropriate load shedding can cause the system frequency to return to normal before the turbine abnormal limits are exceeded. Automatic load-shedding underfrequency relays are used to shed the required amount of load needed to maintain a load-to-generation balance during a system overload.

Therefore, operation at frequencies other than rated or near-rated speed is time-restricted to the limits for various frequency bands published by each turbine manufacturer for various blade designs. The abnormal frequency limits are generally based on worst-case conditions as follows:

- The natural frequencies of blades within a stage differ because of manufacturing tolerance.
- The fatigue may increase with normal operation for reasons such as pitting, corrosion, and erosion of the blade edges.
- The limit should also recognize the effect of additional loss of blade life incurred during abnormal operating conditions not associated with underspeed or overspeed operation.

System islands could be formed because of load-shedding schemes or unforeseen circumstances. Underfrequency protection should be considered for the turbine generator to reduce the risk of steam turbine damage when there is a risk of creating such an island area. In addition, turbine generator underfrequency protection provides backup protection against failure of the load-shedding system.

The following design criteria are suggested as guidelines in development of an underfrequency protection scheme:

- Trip points and time delays should be established based on the manufacturer's turbine abnormal frequency limits.
- The turbine generator underfrequency tripping relays should be coordinated with the system automated load-shedding program.
- Failure of a single underfrequency relay should not cause an unnecessary trip of the machine.
- Failure of a single underfrequency relay to operate during an underfrequency condition should not jeopardize the overall protective scheme.
- Relays should be selected based on their accuracy, speed of operation, and reset capability.
- The turbine underfrequency protection system should be in service whenever the unit is synchronized to the system or while separated from the system but supplying auxiliary power.
- Separate alarms should be provided to alert the operator of a system frequency less than normal and an indication of a pending trip of the unit.

The first step in designing an underfrequency protection scheme is determining the turbine's abnormal frequency operating characteristic. Consultation with the manufacturer should provide the initial design parameters. Once the number of frequency steps is known, the time delay for each step must be determined. Because the allowable underfrequency operation time cannot be identified exactly, some margin should be included in the time delay. This margin allows tripping of the unit prior to damage, with the opportunity to inspect the turbine at the owner's convenience during a future outage. This allows for application of underfrequency protection, even if the unit has been in operation for many years without having accumulated previous underfrequency operational data. The time-delay margins should consider the importance of the unit, the susceptibility of the system to an underfrequency event, and the operating agreements with local or regional power authorities. A 50 to 90 percent range of the allowable time per expected event over the blading life is reasonable. Settings of 50 percent should be considered if the turbine is in poor condition, if there is a high possibility of an underfrequency event, or if the unit is not system critical. If the unit is in good condition, an underfrequency event is unlikely, and the unit is critical to the system, a setting near 90 percent of the allowable underfrequency time should be considered. Recognize that some underfrequency relay timers have an instantaneous reset once the frequency rises above the trip setting, while others accumulate the underfrequency operate time in a memory function (zero reset). The time-delay setting should be a smaller percentage of the allowable time if the relay provides instantaneous reset, whereas the zero-reset relay can be set at a greater percentage of the allowable time.

Fig. 3 demonstrates an underfrequency relay setting. The example indicates the turbine is capable of continuous operation at frequencies above 58.5 Hz and is limited to a maximum of 10 minutes accumulated over the blading life at 56.0 Hz. These are operating conditions with the turbine at load. The underfrequency relay trip-point setting should be set just above 56.0 Hz to allow for relay margin. A setting of 56.2 could be selected. A time-delay setting of 7 minutes could be used if the unit is in fair condition and not critical to the operation of the system and it is acceptable to lose 70 percent of the fatigue life of the blading. If the unit is in good condition and is critical to the system, a longer time delay of 9 minutes could be used to allow the maximum opportunity for system recovery prior to tripping the unit, assuming these events are very rare so that 90 percent of the fatigue life can be expended on it. An alarm should be provided when the underfrequency relay begins to time out, providing operating personnel a warning of the impending underfrequency trip.

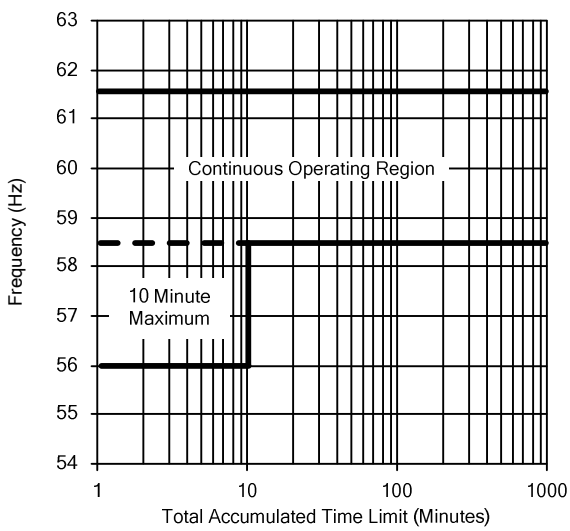

Fig. 3. Example of Turbine Abnormal Frequency Limitations and Settings

If IEC 60034-3:2007 is applicable, as described earlier, time-frequency protection may be required by a manufacturer for the turbine generator. In such situations, the more restrictive of the generator and turbine frequency requirements should be used to determine the appropriate frequency settings for underfrequency relaying. The frequency capability of the generator, when applicable, must be considered in the development of the frequency relay protection scheme.

C. Underfrequency Considerations for Power Steam Plant Auxiliary

The ability of the steam supply system to continue operation during an extended period of underfrequency operation depends on the margin in capacity of the auxiliary motor drives and shaft-drive loads. The most limiting auxiliary equipment is generally the boiler feed pumps, circulating water pumps, and condensate pumps, because each percent of speed reduction causes a larger percent loss of capacity. The critical frequency at which the performance of the pumps will affect the plant output will vary from plant to plant. Consequently, the minimum safe frequency level for maintaining plant output is dependent on each plant and the equipment design and capacity associated with each generating unit.

Protection against underfrequency operation is usually allocated to the thermal protective equipment, but more refined protection is possible using a frequency-sensitive relay or a volt-per-hertz relay, which will measure actual system conditions.

IV. Abnormal Frequency Operation for Combustion-Turbine Generators

The limitations for combustion-turbine generators (CTGs) are similar in many respects to the limitations for steam-turbine generators. However, certain differences in the design and application of CTGs may result in different protective requirements.

A combustion turbine may lose air flow if an attempt is made to maintain full output during underfrequency conditions. Loss of air flow would result in eventual unit trip on blade over temperature. CTGs are equipped with a control system that automatically unloads the unit by reducing fuel flow as speed decreases. This control has the overall effect of protecting the turbine blade from damage and the generator from overheating during underfrequency operation of the unit.

In general, CTGs have a greater capability than steam units for underfrequency operation, particularly if the control system includes a load runback feature. Continuous operation of the CTGs ranges from 56 to 60 Hz, with the turbine blades being the limiting factor. These factors, plus those discussed earlier, suggest an underfrequency protection scheme with a single trip set point at or below the lowest underfrequency trip set point for the steam units in the vicinity. The following guidelines should be used when applying underfrequency protection to combustion turbines:

- Use one underfrequency relay per unit supplied by the unit voltage transformers (VTs).
- If added security is desired, supervise tripping with a second underfrequency relay. This relay may be common to several units.
- Be aware of existing underfrequency protection provided by the manufacturer in the unit's control system. Coordination of settings and trip logic may be required to avoid interference with external protection.

Fig. 4 shows a typical example of the combustion turbines under-/overfrequency limits and associated times.

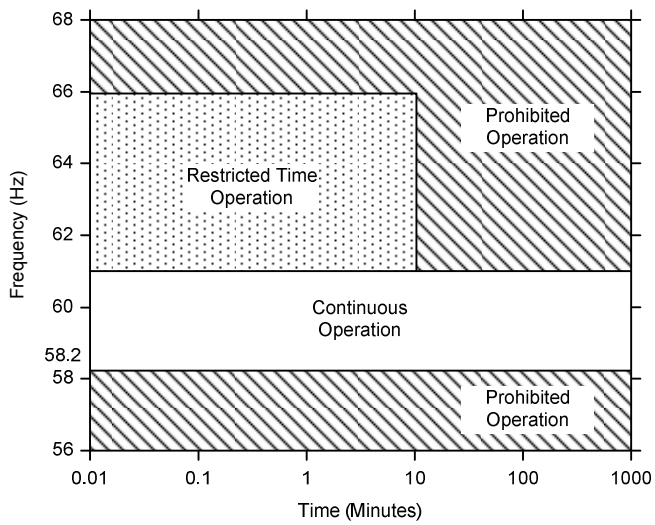

Fig. 4. Typical Combustion Turbine Operational Limits

V. Abnormal Frequency Operation for Combined-Cycle Generating Units

In a combined-cycle generating installation, which is a combination of a combustion-turbine unit and a steam turbine unit, underfrequency limitations will be subject to those described in the previous sections associated with each type of unit. A recommended approach for protecting a combined-cycle installation is to provide separate underfrequency protective schemes for each unit of the combined-cycle installation. The method used should follow the recommendations indicated in the section for each unit.

In an example of a typical combined-cycle unit, under-/overfrequency limits and associated times would be similar to the combustion unit shown in Fig. 4.

VI. Abnormal Frequency Operation for Hydroelectric Generating Units

Hydraulic-powered turbines can usually tolerate much wider frequency deviations than steam or combustion turbines. Underfrequency protection is not normally required for turbine protection. The maximum rate of change of water flow through the turbine is often limited by maximum or minimum pressures that can be tolerated in the penstocks.

The limited rate at which the water inlet gate can be closed may result in overspeeds in excess of 150 percent of nominal speed upon sudden loss of load. While such high speeds may be tolerated for a short while, the units should be brought back to nominal speed within several seconds by governor action. In the event of governor failure, the turbine generator may "run away" at speeds approaching 200 percent of nominal. Overfrequency protection may be applied on hydroelectric generators to backup or replace mechanical overspeed devices. These relays may be set at a lower frequency than the maximum occurring during load rejection but with appropriate time delay to override normal governor action. If governor action does not bring the frequency down within an appropriate time, the overfrequency protection operates.

Operation of the overfrequency protection may indicate a malfunction in the turbine gate control system. Therefore, this protection may be connected to close emergency intake gates or valves upstream of the main turbine inlet gates.

Because of the large frequency variations that may be expected during sudden load changes on hydroelectric generators, customer loads, which may be connected to islands with such generation, may be protected by under-/overfrequency protection. These relays may be set with narrower windows and shorter time delays than needed for protection of the generating plant. The relays are sometimes connected to VTs in the generating plant. Such "quality protection" devices are not to be confused with generator protection. They are intended to protect the quality of supply to customers and are usually connected to disconnect the loads, perhaps with incidental shutdown of the generator.

Because the setting requirements for quality protection are quite independent from the requirements for turbine or generator protection, different relays may be required for the two functions.

VII. Abnormal Frequency Operation for Nuclear Generating Plants

A. Turbine Generator Over-/Underfrequency Capability

In general, the turbine generator considerations that affect operations of the plant are the same as those discussed in Section III on steam generating plants.

B. Underfrequency Considerations for Nuclear Power Plant Auxiliaries

The major effect of an underfrequency condition on the plant auxiliary system causes a reduction in various outputs of electrical coolant pump flows. Operation as a result of reduced flows in parts of the system may be detrimental to plant equipment. Nuclear plant designs that are based on pressurized water reactor (PWR) and boiling water reactor (BWR) are analyzed separately because their responses to abnormal frequency operation differ.

1) PWR Plants

Abnormal frequencies on PWR units affect the reactor coolant pump speed, which varies with the power system frequency. If the frequency at the plant collapses, the reactor will trip automatically when this condition results in reduced coolant flow through the reactor. When the reactor trips, the generator also trips, and the reactor shuts down with the reactor coolant pump connected to the power system. If the frequency continues to decay at a rate greater than the design coast-down rate of the reactor coolant pump, the reactor coolant flow rate will be forced down by the decaying system frequency. This condition could result in a challenge to the safe operation of the plant. This is one of the most serious impacts that an underfrequency condition can impose on a PWR plant.

In addressing this condition, one possible solution is to isolate the reactor coolant pumps from the power system if the system frequency decay exceeds the pump design coast-down rate. Accomplishing this task requires the application of an underfrequency relay to trip the reactor and generator at a frequency level that will allow an isolated reactor coolant pump to meet its coast-down operational performance requirements. The following parameters should be considered when applying underfrequency protection to a PWR plant:

- The designed departure from the nuclear boiling ratio of the plant.
- The size of the coolant system with respect to the reactor core.
- The maximum rate of power system frequency decay that may be encountered.
- The rating of the core with respect to loading.
- Coordination with power system load-shedding schemes.
- System voltage conditions that exist at the time of a system frequency decline.

2) BWR Plants

Some BWR units employ nonseismically qualified motor-generator sets to supply power to the reactor protection systems. To ensure that these systems can perform their intended safety functions during a seismic event for which an underfrequency condition of the motor-generator sets or alternate supply could damage components of these systems, redundant underfrequency relays are provided. This protection is provided between the alternate power source and the reactor protection system buses. Operation of either or both of the underfrequency relays associated with a reactor protection system will cause a half scram of the unit. If one or both of the underfrequency relays operate on each of the reactor system protection buses, a full scram of the unit occurs. Several factors should be considered in the setting of the underfrequency relays for BWR units:

- The tolerance characteristic of the underfrequency relay.
- The slip characteristic of the motor-generator sets.
- The characteristics of the power system load-shedding schemes.

VIII. References

[1] *Rotating Electrical Machines – Part 3: Specific Requirements for Synchronous Generators Driven by Steam Turbines or Combustion Gas Turbines*, IEC Standard 60034-3, Nov. 2007.

[2] *IEEE Guide for Abnormal Frequency Protection for Power Generating Plants*, IEEE Standard C37.106-2003, 2004.